CITY OF DYERSBURG, TENNESSEE

DYERSBURG WATER SYSTEM
SCADA UPGRADES

SSR PROJECT #: 22640820

BID SET
APRIL 11, 2025

CIVIL

INSTRUMENTATION

SSR
6055 Primacy Parkway,
Suite 401
Memphis, TN 38118
(901) 683-3900
www.ssr-inc.com
SSR Project #: 22640820

4/9/2025 2:07:47 PM Z:\22Proj\64\22640820\Water Project 1 - WTP Upgrades\SCADA Project\G0.0 COVER.dwg

Copyright © 2021 By Smith Seckman Reid, Inc. All rights reserved. This document, or parts thereof, may not be reproduced in any form without written permission.

SSR PROJECT #:22640820

DRAWING INDEX, VICINITY MAP & GENERAL NOTES

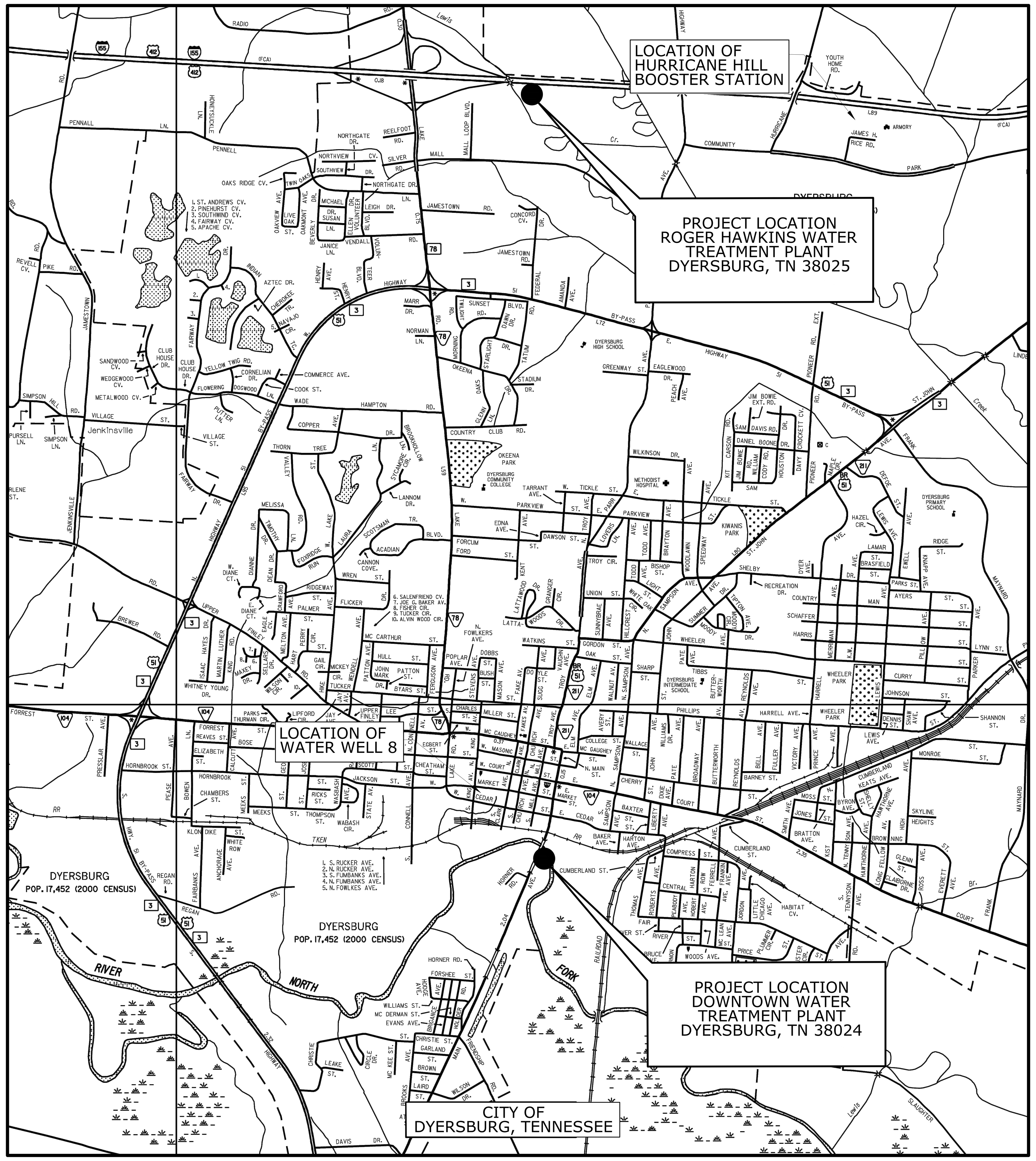

VICINITY MAP

LIST OF DRAWINGS

G0.0	COVER SHEET
G0.1	DRAWING INDEX, VICINITY MAP AND GENERAL NOTES
I1.01	SCADA NETWORK ON-LINE DIAGRAM
I1.02	ROGER HAWKINS WTP MAIN CONTROL PANEL PLC REPLACEMENT
I1.03	ROGER HAWKINS WTP WELL FLOW CONTROL PANEL PLC REPLACEMENT
I1.04	ROGER HAWKINS WTP CHEMICAL FEED CONTROL PANEL PLC REPLACEMENT
I1.05	ROGER HAWKINS WTP FILTER CONSOLES PLC REPLACEMENT
I1.06	DOWNTOWN WTP MAIN CONTROL PANEL PLC REPLACEMENT
I1.07	DOWNTOWN WTP EFFLUENT FLOW CONTROL PANEL PLC REPLACEMENT
I1.08	HURRICANE BOOSTER PUMP RTU PANEL EXTERNAL & INTERNAL DETAILS
I1.09	HURRICANE BOOSTER PUMP RTU PANEL POWER DISTRIBUTION
I1.10	HURRICANE BOOSTER PUMP RTU PANEL INPUT & OUTPUT WIRING
I1.11	HURRICANE BOOSTER PUMP RTU PANEL ANALOG INPUT/OUTPUT WIRING
I1.12	WELL PUMP 8 RTU PANEL EXTERNAL & INTERNAL DETAILS
I1.13	WELL PUMP 8 RTU PANEL POWER DISTRIBUTION
I1.14	WELL PUMP 8 RTU PANEL INPUT & OUTPUT WIRING
I1.15	WELL PUMP RTU PANEL ANALOG INPUT/OUTPUT WIRING

GENERAL NOTES

1. ALL NOTES GIVEN HERE APPLY TO ALL SHEETS.
2. ANY APPARENT DISCREPANCIES, ERRORS OR OMISSIONS FOUND WITHIN THESE PLANS SHALL BE BROUGHT TO THE ATTENTION OF THE ENGINEER PRIOR TO BID SUBMITTAL.
3. THE LOCATION OF EXISTING UTILITIES, STRUCTURES AND UNDERGROUND PIPING ARE SHOWN IN APPROXIMATE WAY ONLY. THE CONTRACTOR SHALL DETERMINE THE EXACT LOCATION AND ELEVATION OF EXISTING UTILITIES, STRUCTURES AND UNDERGROUND PIPING PRIOR TO COMMENCING WORK IN EACH AREA. THE CONTRACTOR SHALL BE FULLY RESPONSIBLE FOR ANY AND ALL DAMAGES WHICH MAY BE OCCASIONED BY HIS FAILURE TO EXACTLY LOCATE AND PRESERVE ANY AND ALL UTILITIES, STRUCTURES, AND UNDERGROUND PIPING.
4. THE CONTRACTOR SHALL PROVIDE ALL NECESSARY PROTECTIVE MEASURES TO SAFEGUARD EXISTING UTILITIES FROM DAMAGE DURING CONSTRUCTION OF THE PROJECT. IN THE EVENT THAT SPECIAL EQUIPMENT IS REQUIRED TO WORK OVER OR AROUND THE UTILITIES, THE CONTRACTOR WILL BE REQUIRED TO FURNISH SUCH EQUIPMENT AT NO ADDITIONAL COST TO THE OWNER.
5. EXISTING PAVEMENT DAMAGED BY CONSTRUCTION, SHALL BE REPLACED INCLUDING SUB-BASE BY CONTRACTOR AS DIRECTED BY THE ENGINEER AT NO ADDITIONAL COST TO THE OWNER.
6. ALL OPENINGS, PIPE SLEEVES, CONDUITS, INSERTS AND OTHER IMBEDDED ITEMS SHALL BE IN PLACE BEFORE CONCRETE IS PLACED. SEE PROCESS AND ELECTRICAL SHEETS FOR ITEMS REQUIRING SLEEVES OR IMBEDMENT IN CONCRETE.
7. EXTREME PRECAUTIONS SHALL BE EXERCISED DURING CONSTRUCTION (EXCAVATION AND OTHER OPERATIONS) IN ORDER TO PROTECT THE EXISTING UTILITIES, VAULTS, UTILITY STRUCTURES, AND OTHER STRUCTURES. ANY DAMAGES SHALL BE RESTORED TO THE SATISFACTION OF THE OWNER AT THE CONTRACTOR'S EXPENSE. IF THE CONTRACTOR DAMAGES ANY EXISTING UTILITIES DURING CONSTRUCTION, HE SHALL, AT HIS OWN EXPENSE, HAVE REPLACED OR REPAIRED THE UTILITIES TO THEIR ORIGINAL OR BETTER CONDITION AND QUALITY, AS APPROVED BY THE REPRESENTATIVE OF THE APPROPRIATE UTILITY COMPANY.
8. INVESTIGATIONS OF SUB-SURFACE CONDITIONS WITHIN AND ADJACENT TO WORK AREAS SHALL BE MADE BY THE CONTRACTOR. THE OWNER AND ENGINEER SHALL NOT ASSUME ANY RESPONSIBILITY FOR THE SUB-SURFACE CONDITIONS SUCH AS ROCK, CAVITIES, ETC.
9. ALL BURIED PIPES SHALL HAVE A MINIMUM 3 FEET OF COVER. APPURTENANCES INCLUDING VALVES, BENDS, AND OTHER FITTINGS, CONCRETE BLOCKING, CAPPING AND PLUGGING SHALL BE PROVIDED IN ACCORDANCE WITH THE CONTRACT DOCUMENTS.
10. CONTRACTOR SHALL BE AWARE OF THE CURRENT TENNESSEE BURIAL LAW WHICH PROTECTS BOTH MARKED AND UNMARKED HISTORIC AND PRE-HISTORIC SITES. IN THE EVENT HUMAN BURIALS ARE ENCOUNTERED DURING CONSTRUCTION ACTIVITIES, CONSTRUCTION IN THE IMMEDIATE VICINITY OF DISCOVERY SHALL CEASE IMMEDIATELY AND THE CONTRACTOR SHALL NOTIFY THE TENNESSEE DIVISION OF ARCHEOLOGY, OWNER, AND ENGINEER IMMEDIATELY FOR FURTHER ASSESSMENT.
11. ALL EXISTING PIPING, STRUCTURES ETC. THAT ARE TO BE DEMOLISHED SHALL BE FULLY DEMOLISHED AND REMOVED FROM SITE. ANY EXISTING PIPING OR STRUCTURES IN CONFLICT WITH NEW CONSTRUCTION SHALL BE COORDINATED WITH OWNER AND RELOCATED AS REQUIRED.
12. PRIOR TO BEGINNING CONSTRUCTION, THE CONTRACTOR SHALL VERIFY ALL LAYOUTS AND ELEVATIONS FOR PROPOSED SURFACE, AND DRAINAGE/SUB-SURFACE IMPROVEMENTS SHOWN ON THE PLANS, AND SHALL REPORT ANY CONFLICT WITH EXISTING UTILITIES AND OTHER STRUCTURES, DISCREPANCIES, OMISSIONS OR UNCLEAR FEATURES TO THE ENGINEER BEFORE PROCEEDING WITH THE WORK.
13. ALL OF THE EXCESS MATERIAL WHICH IS UNSUITABLE FOR USE IN THE CONSTRUCTION OF THE PROJECT SHALL BE REMOVED AND DISPOSED OF BY THE CONTRACTOR AT NO ADDITIONAL COST TO OWNER.
14. AREAS FOR PAVING, JOB TRAILERS, STAGING AREAS AND STORAGE OF MATERIALS SHALL BE COORDINATED WITH OWNER PRIOR TO MOBILIZATION.
15. ALL DETAILS SHALL APPLY TO ALL ASPECTS OF WORK AND ALL AREAS REGARDLESS OF SPECIAL AREA DESIGNATIONS INDICATED ON ANY PARTICULAR DRAWING.
16. CONTRACT DOCUMENTS DIRECT ATTENTION TO CERTAIN REQUIRED FEATURES OF EQUIPMENT, BUT DO NOT PURPORT TO COVER ALL DETAILS OF DESIGN AND CONSTRUCTION. NEVERTHELESS, CONTRACTOR SHALL PROVIDE EQUIPMENT COMPLETE IN ALL DETAILS, IN EVERY RESPECT AND READY FOR OPERATION AND FUNCTIONALITY, AS DESCRIBED IN THESE CONTRACT DOCUMENTS. ALL PRODUCTS, MATERIALS AND LABOR NECESSARY TO PROVIDE A FULLY FUNCTIONAL SYSTEM TO FULFILL DESIGN INTENT SHOWN IN CONTRACT DOCUMENTS SHALL BE PROVIDED BY CONTRACTOR AT NO ADDITIONAL COST TO OWNER.
17. DEVIATION FROM CONTRACT DOCUMENTS WITHOUT PRIOR CONSENT OF OWNER AND ENGINEER SHALL BE CAUSE FOR WORK TO BE DEEMED UNACCEPTABLE.
18. ALTHOUGH EVERY EFFORT HAS BEEN MADE TO COORDINATE WORK OF EACH TRADE ON RESPECTIVE DRAWINGS AND SPECIFICATIONS, THERE ARE INSTANCES WHERE WORK IS SHOWN ON OR CROSS-REFERENCED TO OTHER DRAWINGS AND/OR SPECIFICATIONS. EACH CONTRACTOR AND SUBCONTRACTOR SHALL BE FULLY RESPONSIBLE TO REVIEW ALL DRAWINGS AND SPECIFICATIONS WHETHER FOR THEIR SPECIFIC TRADE OR NOT, AND TO COORDINATE WORK ACCORDINGLY WITH ALL TRADES.
19. WHILE EVERY EFFORT HAS BEEN MADE BY ENGINEER TO IDENTIFY ITEMS TO BE DEMOLISHED, CONTRACTOR SHALL BE RESPONSIBLE TO REVIEW SCOPE OF WORK AND EXISTING FIELD CONDITIONS AND DEMOLISH ALL ITEMS NECESSARY TO ACCOMMODATE WORK AND RESTORE ANY DEMOLISHED ITEMS REQUIRED FOR PROPER OPERATION OF NEW WORK AND EXISTING ITEMS TO REMAIN.
20. CONTRACTOR TO PROVIDE EQUIPMENT NAMING AND NUMBERING FOLLOWING OWNER'S METHODOLOGY FOR ALL NEW EQUIPMENT AND INSTRUMENTATION PROVIDED.
21. CONTRACTOR SHALL FIELD VERIFY EXISTING CONDITIONS AND ADVISE ENGINEER OF ANY OBSERVED DISCREPANCIES THAT MAY IMPACT PROPOSED WORK.
22. EROSION PROTECTION AND SEDIMENT CONTROL MEASURES SHALL BE MAINTAINED AT ALL TIMES BY CONTRACTOR. ADDITIONAL EROSION AND SEDIMENT CONTROL MEASURES SHALL BE INSTALLED BY CONTRACTOR IF DEEMED NECESSARY BY ON-SITE-INSPECTION.
23. THE CONTRACTOR SHALL ENSURE THAT POSITIVE AND ADEQUATE DRAINAGE IS MAINTAINED AT ALL TIMES WITHIN THE PROJECT LIMITS.
24. CONTRACTOR SHALL MEET ALL LOCAL UTILITY COMPANY REGULATIONS IN ANY READJUSTMENT OR RELOCATION OF EXISTING SERVICES.
25. CONTRACTOR TO COORDINATE ALL EQUIPMENT PAD SIZES WITH THE EQUIPMENT MFR. PRIOR TO FORMING TO ENSURE PROPER SIZING, PROPER CLEARANCES AND PROPER ANCHORAGE TO PAD WILL BE ACHIEVED. SEE STRUCTURAL SHEETS FOR DETAILS. ALL FLOOR MOUNTED EQUIPMENT SHALL BE PROVIDED WITH A HOUSEKEEPING PAD.
26. COORDINATE ALL PROJECT DELIVERIES WITH OWNER, INCLUDING DESIRED ROUTING OF TRUCKS. MINIMIZE IMPACT TO EXISTING FACILITIES AS MUCH AS POSSIBLE.
27. CONTRACTOR SHALL FIELD VERIFY EXISTING CONDITIONS AND ADVISE ENGINEER OF ANY OBSERVED DISCREPANCIES WITH CONTRACT DOCUMENT THAT MAY IMPACT PROPOSED WORK.
28. ALL DISTURBED AREAS WITHIN THE CONSTRUCTION SITE NOT COVERED BY BUILDINGS, STRUCTURES, OR PAVEMENT SHALL BE TOP-SOILED AND SEEDED UNLESS OTHERWISE DIRECTED BY THE ENGINEER. TOP-SOIL SHALL BE 4" THICK AFTER COMPACTION. (DISTURBED AREAS ONLY)
29. CONFLICTS BETWEEN DRAWINGS OF DIFFERENT DISCIPLINES SHALL BE BROUGHT TO ATTENTION OF ENGINEER FOR RESOLUTION PRIOR TO COMMENCEMENT OF CONSTRUCTION. CONTRACTOR SHALL BE RESPONSIBLE FOR COORDINATION BETWEEN HIMSELF AND HIS SUBCONTRACTOR TO ELIMINATE CONFLICTS. FAILURE TO COORDINATE, AND ANY RESULTING CONFLICTS, SHALL BE RESOLVED BY CONTRACTOR AT NO ADDITIONAL COST TO OWNER.
30. ALL EQUIPMENT SHALL BE PROVIDED WITH A MINIMUM 4-INCH TALL, OR TALLER AS INDICATED IN CONTRACT DOCUMENTS, HOUSEKEEPING PAD UNLESS NOTED OTHERWISE. FOR EQUIPMENT NOT SHOWN OR INDICATED TO HAVE A PAD, CONTRACTOR SHALL ADVISE ENGINEER FOR CLARIFICATION PRIOR TO PROCEEDING WITH WORK.
31. ALL PLC AND OTHER EQUIPMENT REMOVED/REPLACED IN THIS SCOPE OF WORK TO BE RETAINED BY THE OWNER.

SSR
6055 Primacy Parkway,
Suite 401
Memphis, TN 38118
(901) 683-3900
www.ssr-inc.com
SSR Project #: 22640820

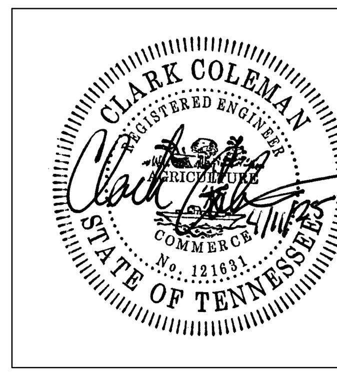

REVISIONS

REV	DATE	DESCRIPTION

CITY OF DYERSBURG, TENNESSEE

DYERSBURG WATER SYSTEM SCADA UPGRADES

DRAWN BY	MW
DESIGNED BY	TCC
CHECKED BY	TFH

SHEET TITLE

DRAWING INDEX, VICINITY MAP & GENERAL NOTES

DATE: APRIL 11, 2025

PROJECT STATUS: BID SET

SHEET NUMBER: G0.1

Copyright 2021 By Smith Seckman Reid, Inc. All rights reserved. This document, or parts thereof, may not be reproduced in any form without written permission.

Z:\22Proj\64\22640820\Water Project 1 - WTP Upgrades\SCADA Project\G0.1 V-MAP & GENERAL NOTES.dwg
4/9/2025 2:19:05 PM

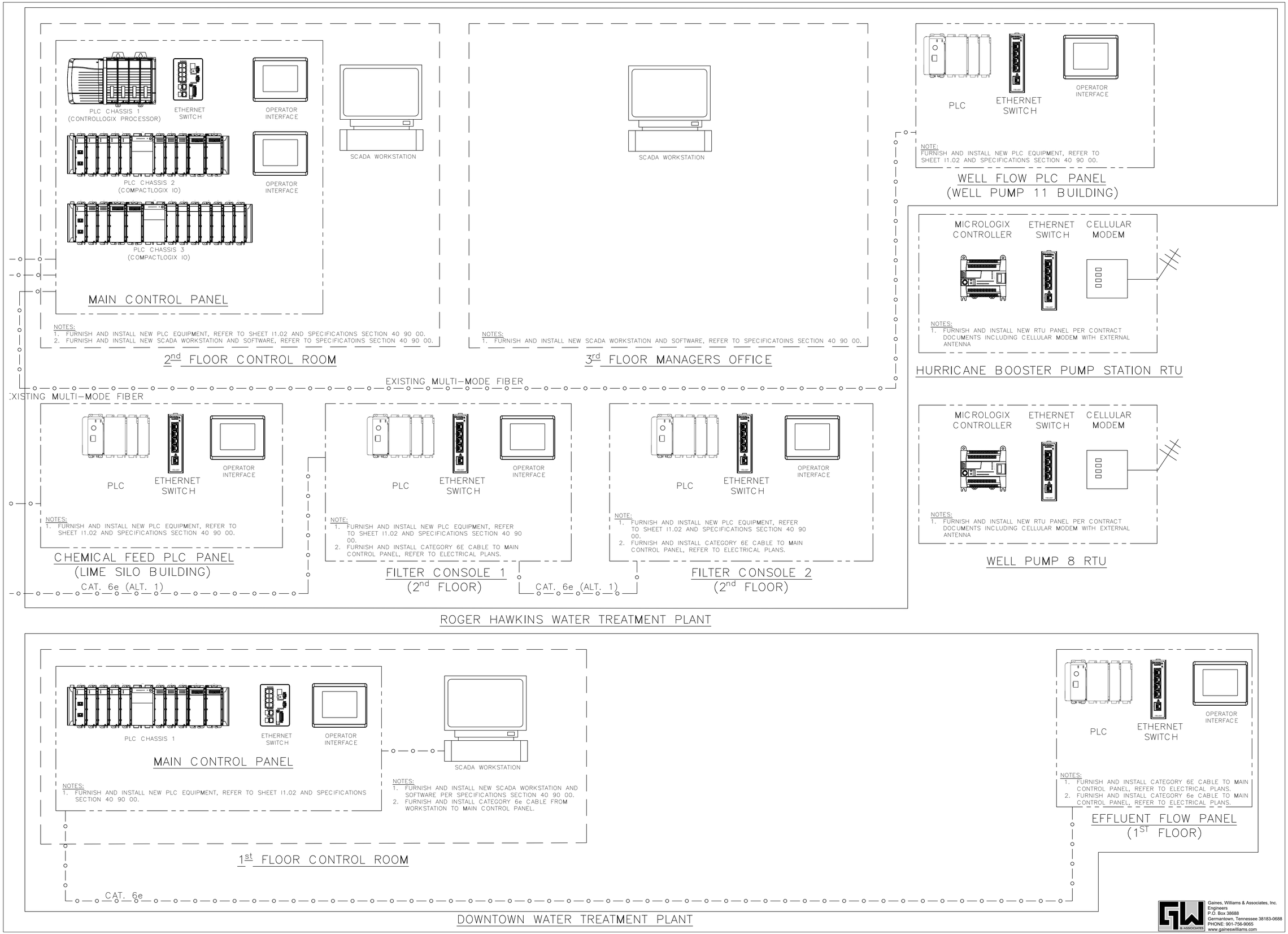

Smith Seckman Reid, Inc.
655 Primacy Parkway
Suite 401
Memphis, TN 38119
(901) 683-3900
FAX: (901) 683-3990
www.ssr-inc.com

SSR Project #:22640820

04/11/25

REV	DATE	DESCRIPTION

REVISIONS

CITY OF DYERSBURG, TENNESSEE
DYERSBURG WATER SYSTEM
SCADA UPGRADES

DRAWN BY	RSG
DESIGNED BY	RSG
CHECKED BY	RSG

SHEET TITLE

SCADA NETWORK ONE-LINE DIAGRAM

DATE

PROJECT STATUS

BID SET

SHEET NUMBER

I1.01

Gaines, Williams & Associates, Inc.
Engineers
P.O. Box 38688
Germantown, Tennessee 38183-0688
PHONE: 901-756-9065
www.gaineswilliams.com

Copyright 2021 By Smith Seckman Reid, Inc. All rights reserved. This document

C:\Documents\PROJECTS\Dyersburg\SCADA Upgrade\DWGS\24104EI100.dwg

4/9/2025 1:24:51 PM

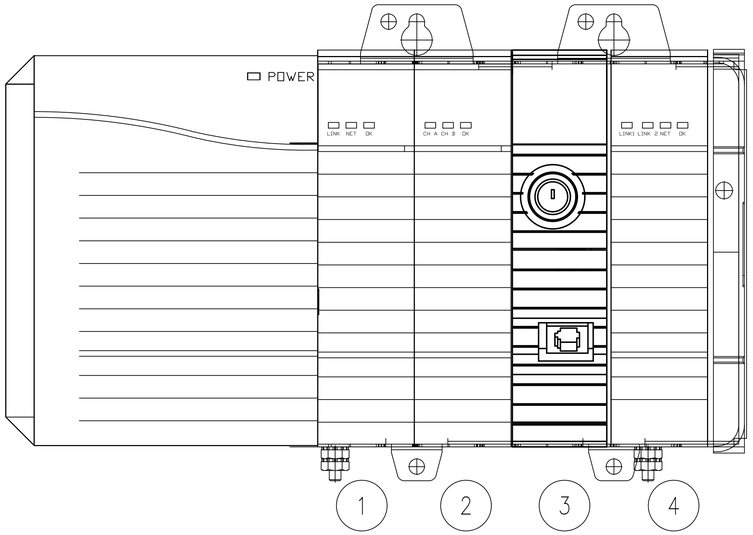

EXISTING PLC CHASSIS 1 DETAIL

NOT TO SCALE

NOTE:

1. EXISTING CONTROLLOGIX CHASSIS WITH POWER SUPPLY, 1756-ENTB (SLOT 0) AND 1756-DHRIO (SLOT 1).
2. FURNISH AND INSTALL ALLEN-BRADLEY CONTROLLOGIX 1756-L83E PROCESSOR IN SLOT 2.
3. FURNISH AND INSTALL ALLEN-BRADLEY CONTROLLOGIX 1756-EN2TR IN SLOT 3.
4. FURNISH AND INSTALL NEW ALLEN-BRADLEY STRATIX ETHERNET SWITCH IN PANEL.
5. FURNISH AN DINSTALL NEW N-TRON FIBER TO COPPER MEDIA CONVERTERS.
6. FURNISH AND INSTALL PATCH CABLE FROM PROCESSOR TO ETHERNET SWITCH.
7. FURNISH AND INSTALL PATCH CABLES FROM 1756-EN2TR TO EACH IO CHASSIS.
8. REMOVE EXISTING OPERATOR INTERFACE TERMINALS, FURNISH AND INSTALL NEW PANELVIEW 7 PLUS TERMINALS.

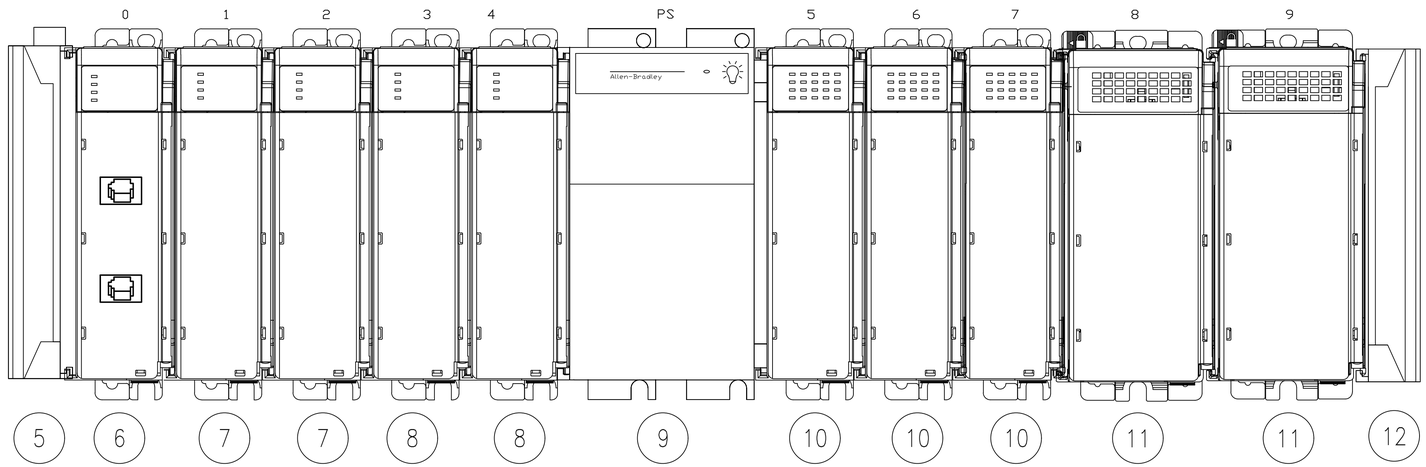

NEW PLC CHASSIS 2 DETAIL

NOT TO SCALE

NOTE:

1. ALL ITEMS LISTED SHALL BE FURNISHED AS LISTED, NO EXCEPTIONS AS THEY ARE LIKE REPLACEMENTS OF THE EXISTING ALLEN-BRADLEY SLC IO.
2. THE CONTRACTOR SHALL LABEL AND DISCONNECT CONTROL WIRING FROM EXISTING PLC TERMINALS.
3. THE CONTRACTOR SHALL REMOVE EXISTING PLC FROM EXISTING ENCLOSURE.
4. THE CONTRACTOR SHALL INSTALL NEW PLC IN EXISTING ENCLOSURE.
5. THE CONTRACTOR SHALL RECONNECT EXISTING WIRING TO NEW PLC IO TERMINALS IN THE SAME IO LOCATION AS PREVIOUS ON SLC IO.

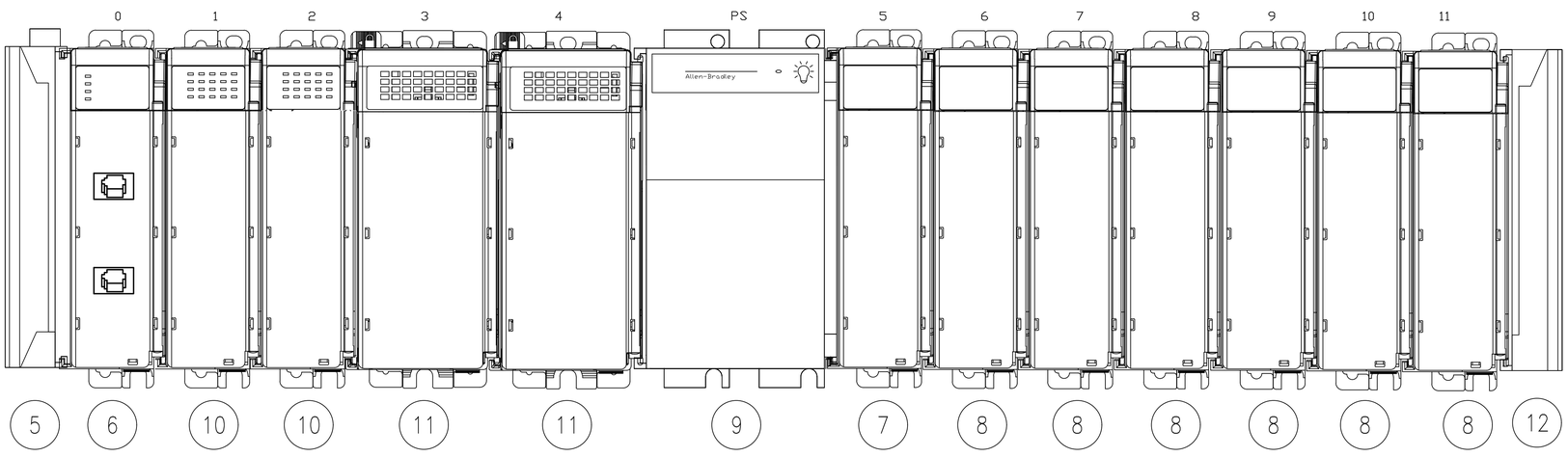

NEW PLC CHASSIS 3 DETAIL

NOT TO SCALE

NOTE:

1. ALL ITEMS LISTED SHALL BE FURNISHED AS LISTED, NO EXCEPTIONS AS THEY ARE LIKE REPLACEMENTS OF THE EXISTING ALLEN-BRADLEY SLC IO.
2. THE CONTRACTOR SHALL LABEL AND DISCONNECT CONTROL WIRING FROM EXISTING PLC TERMINALS.
3. THE CONTRACTOR SHALL REMOVE EXISTING PLC FROM EXISTING ENCLOSURE.
4. THE CONTRACTOR SHALL INSTALL NEW PLC IN EXISTING ENCLOSURE.
5. THE CONTRACTOR SHALL RECONNECT EXISTING WIRING TO NEW PLC IO TERMINALS IN THE SAME IO LOCATION AS PREVIOUS ON SLC IO.

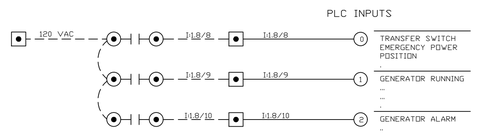

NOTE:

1. THIS CONTRACTOR SHALL FURNISH AND INSTALL CONTROL WIRING SHOWN ABOVE TO PROPOSED GENERATOR FURNISHED UNDER SEPARATE CONTRACT

GLOBAL NOTES:

1. ALL EXISTING IO POINTS ARE CONNECTED TO TERMINALS OR SURGE SUPRESSION DEVICES, DISCONNECT AND LABEL ALL CONDUCTORS FROM EXISTING IO MODULES, CONNECT TO THE LIKE PHYSICAL POINT ON NEW IO MOUDLES. REFER TO EXISTING SYSTEM WIRING DIAGRAMS.
2. CONTRACTOR SHALL UTILIZE EXISTING SYSTEM WIRING DIAGRAMS AND PREPARE NEW RECORD IO DRAWINGS IN AUTOCAD 2023 FORMAT WITH FULL IO POINT DOCUMENTATION. CONTRACTOR SHALL FURNISH TO THE OWNER ELECTRONIC COPIES OF IO DRAWINGS IN PDF AND EDITABLE AUTOCAD FORMAT.

MAIN PLC PANEL

NO.	QTY.	DESCRIPTION	PART NO.
1	1	ALLEN-BRADLEY CONTROLLOGIX ETHERNET MODULE (EXISTING)	1756-ENBT
2	1	ALLEN-BRADLEY CONTROLLOGIX DH+ RIO MODULE (EXISTING)	1756-DHRIO
3	1	ALLEN-BRADLEY CONTROLLOGIX PROCESSOR	1756-L83E
4	1	ALLEN-BRADLEY CONTROLLOGIX ETHERNET MODULE	1756-EN2TR
5	2	ALLEN-BRADLEY COMPACTLOGIX LEFT END CAP	1769-ECL
6	2	ALLEN-BRADLEY COMPACTLOGIX ETHERNET ADAPTER	1769-AENTR
7	3	ALLEN-BRADLEY COMPACTLOGIX ANALOG INPUT MODULE, 4 CHANNEL	1769-IF4
8	8	ALLEN-BRADLEY COMPACTLOGIX ANALOG OUTPUT MODULE, 4 CHANNEL	1769-OF4
9	2	ALLEN-BRADLEY COMPACTLOGIX POWER SUPPLY	1769-PA4
10	5	ALLEN-BRADLEY COMPACTLOGIX INPUT MODULE, 120VAC, 16 POINT	1769-IA16
11	4	ALLEN-BRADLEY COMPACTLOGIX OUTPUT MOUDLE, 120VAC, 16 POINT	1769-OA16
12	1	ALLEN-BRADLEY COMPACTLOGIX RIGHT END CAP	1769-ECR
13	2	ALLEN-BRADLEY PANELVIEW PLUS 7 PERFORMANCE TERMINAL, 7:	2711P-T7C22D9P
13	10	CATEGORY 6E PATCH ETHERNET PATCH CABLES (LEGTH AS REQUIRED)	
14	2	RED LION N-TRON COPPER TO FIBER CONVERTER, SC CONNECTORS	120MC-SC
15	1	ALLEN-BRADLEY STRATIX 5700, 10 PORT, MANAGED SWITCH	1783-BMS10CL

Gaines, Williams & Associates, Inc.
Engineers
P.O. Box 38688
Germantown, Tennessee 38183-0688
PHONE: 901-756-9065
www.gaineswilliams.com

Smith Seckman Reid, Inc.
655 Primacy Parkway
Suite 401
Memphis, TN 38119
(901) 683-3900
FAX: (901) 683-3990
www.ssr-inc.com

SSR Project #:22640820

ROBERT S. GAINES
PROFESSIONAL ENGINEER
AGRICULTURE
STATE OF TENNESSEE
04/11/25

REVISIONS

REV	DATE	DESCRIPTION

CITY OF DYERSBURG, TENNESSEE

DYERSBURG WATER SYSTEM SCADA UPGRADES

DRAWN BY	RSG
DESIGNED BY	RSG
CHECKED BY	RSG

SHEET TITLE

ROGER HAWKINS WTP MAIN CONTROL PANEL PLC REPLACEMENT

DATE: APRIL 11, 2025

PROJECT STATUS: BID SET

SHEET NUMBER: **I1.02**

Copyright 2021 By Smith Seckman Reid, Inc. All rights reserved. This document

C:\Documents\PROJECTS\Dyersburg\SCADA Upgrade\DWGS\241104E1102.dwg

4/9/2025 1:25:00 PM

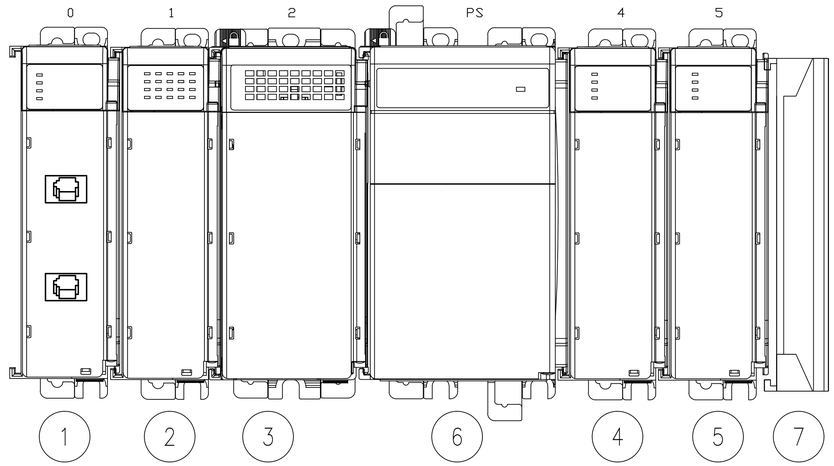

NEW PLC CHASSIS 1 DETAIL

NOT TO SCALE

NOTE:

1. ALL ITEMS LISTED SHALL BE FURNISHED AS LISTED, NO EXCEPTIONS AS THEY ARE LIKE REPLACEMENTS OF THE EXISTING ALLEN–BRADLEY SLC IO.
2. THE CONTRACTOR SHALL LABEL AND DISCONNECT CONTROL WIRING FROM EXISTING PLC TERMINALS.
3. THE CONTRACTOR SHALL REMOVE EXISTING PLC FROM EXISTING ENCLOSURE.
4. THE CONTRACTOR SHALL INSTALL NEW PLC IN EXISTING ENCLOSURE.
5. THE CONTRACTOR SHALL RECONNECT EXISTING WIRING TO NEW PLC IO TERMINALS IN THE SAME IO LOCATION AS PREVIOUS ON SLC IO.
6. FURNISH AND INSTALL NEW ALLEN–BRADLEY ETHERNET SWITCH IN PANEL.
7. FURNISH AND INSTALL NEW N–TRON FIBER TO MEDIA CONVERTER IN PANEL.
8. REMOVE EXISTING OPERATOR INTERFACE TERMINALS, FURNISH AND INSTALL NEW PANELVIEW 7 PLUS TERMINALS.

WELL FLOW PLC PANEL

NO.	QTY.	DESCRIPTION	PART NO.
1	1	ALLEN-BRADLEY COMPACTLOGIX PROCESSOR	1769-L33ER
2	1	ALLEN-BRADLEY COMPACTLOGIX INPUT MODULE, 120VAC, 16 POINT	1769-IA16
3	1	ALLEN-BRADLEY COMPACTLOGIX OUTPUT MOUDLE, 120VAC, 16 POINT	1769-OA16
4	1	ALLEN-BRADLEY COMPACTLOGIX ANALOG OUTPUT MODULE, 4 CHANNEL	1769-OF4
5	1	ALLEN-BRADLEY COMPACTLOGIX ANALOG INPUT MODULE, 4 CHANNEL	1769-IF4
6	1	ALLEN-BRADLEY COMPACTLOGIX POWER SUPPLY	1769-PA4
7	1	ALLEN-BRADLEY COMPACTLOGIX RIGHT END CAP	1769-ECR
8	3	CATEGORY 6E PATCH ETHERNET PATCH CABLES (LEGTH AS REQUIRED)	
9	1	RED LION N-TRON COPPER TO FIBER CONVERTER, SC CONNECTORS	120MC-SC
10	1	ALLEN-BRADLEY STRATIX 2000 UNMANAGED SWITCH, 5 ETHERNET COPPER PORTS	1783-US5TG
11	1	ALLEN-BRADLEY PANELVIEW PLUS 7 PERFORMANCE TERMINAL	2711P-T7C22D9P

GLOBAL NOTES:

1. ALL EXISTING IO POINTS ARE CONNECTED TO TERMINALS OR SURGE SUPRRESSION DEVICES, DISCONNECT AND LABEL ALL CONDUCTORS FROM EXISTING IO MODULES, CONNECT TO THE LIKE PHYSICAL POINT ON NEW IO MOUDLES. REFER TO EXISTING SYSTEM WIRING DIAGRAMS.
2. CONTRACTOR SHALL UTILIZE EXISTING SYSTEM WIRING DIAGRAMS AND PREPARE NEW RECORD IO DRAWINGS IN AUTOCAD 2023 FORMAT WITH FULL IO POINT DOCUMENTATION. CONTRACTOR SHALL FURNISH TO THE OWNER ELECTRONIC COPIES OF IO DRAWINGS IN PDF AND EDITABLE AUTOCAD FORMAT.

Smith Seckman Reid, Inc.
655 Primacy Parkway
Suite 401
Memphis, TN 38119
(901) 683-3900
FAX: (901) 683-3990
www.ssr-inc.com

SSR Project #:22640820

ROBERT S. GAINES, JR. PROFESSIONAL ENGINEER AGRICULTURE 11 CONTRACTOR STATE OF TENNESSEE

04/11/25

REVISIONS

REV	DATE	DESCRIPTION

CITY OF DYERSBURG, TENNESSEE

DYERSBURG WATER SYSTEM
SCADA UPGRADES

DRAWN BY	RSG
DESIGNED BY	RSG
CHECKED BY	RSG

SHEET TITLE

ROGER HAWKINS WTP WELL FLOW CONTROL PANEL PLC REPLACEMENT

DATE

APRIL 11, 2025

PROJECT STATUS

BID SET

SHEET NUMBER

I1.03

Gaines, Williams & Associates, Inc.
Engineers
P.O. Box 38688
Germantown, Tennessee 38183-0688
PHONE: 901-756-9065
www.gaineswilliams.com

Copyright 2021 By Smith Seckman Reid Inc. All rights reserved. This document

4/9/2025 1:25:07 PM C:\Documents\PROJECTS\Dyersburg\SCADA Upgrade\DWGS\2410\E1103.dwg

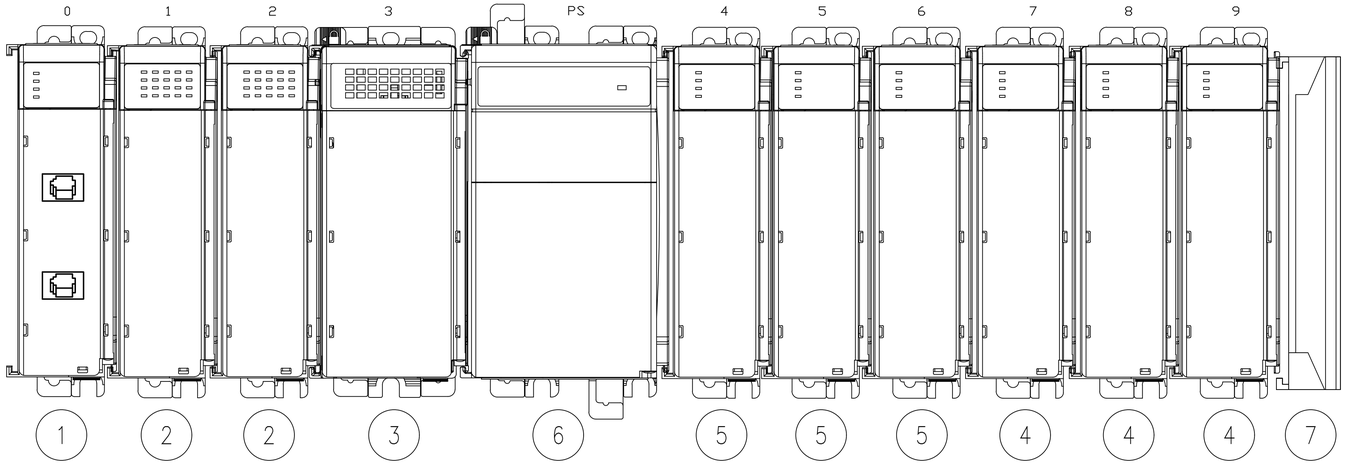

NEW PLC CHASSIS 1 DETAIL

NOT TO SCALE

NOTE:

1. ALL ITEMS LISTED SHALL BE FURNISHED AS LISTED, NO EXCEPTIONS AS THEY ARE LIKE REPLACEMENTS OF THE EXISTING ALLEN–BRADLEY SLC IO.
2. THE CONTRACTOR SHALL LABEL AND DISCONNECT CONTROL WIRING FROM EXISTING PLC TERMINALS.
3. THE CONTRACTOR SHALL REMOVE EXISTING PLC FROM EXISTING ENCLOSURE.
4. THE CONTRACTOR SHALL INSTALL NEW PLC IN EXISTING ENCLOSURE.
5. THE CONTRACTOR SHALL RECONNECT EXISTING WIRING TO NEW PLC IO TERMINALS IN THE SAME IO LOCATION AS PREVIOUS ON SLC IO.
6. FURNISH AND INSTALL NEW ALLEN–BRADLEY ETHERNET SWITCH IN PANEL.
7. FURNISH AND INSTALL NEW N–TRON FIBER TO MEDIA CONVERTER IN PANEL.
8. REMOVE EXISTING OPERATOR INTERFACE TERMINALS, FURNISH AND INSTALL NEW PANELVIEW 7 PLUS TERMINALS.

CHEMICAL FEED PLC PANEL

NO.	QTY.	DESCRIPTION	PART NO.
1	1	ALLEN-BRADLEY COMPACTLOGIX PROCESSOR	1769-L33ER
2	2	ALLEN-BRADLEY COMPACTLOGIX INPUT MODULE, 120VAC, 16 POINT	1769-IA16
3	1	ALLEN-BRADLEY COMPACTLOGIX OUTPUT MOUDLE, 120VAC, 16 POINT	1769-OA16
4	3	ALLEN-BRADLEY COMPACTLOGIX ANALOG OUTPUT MODULE, 4 CHANNEL	1769-OF4
5	3	ALLEN-BRADLEY COMPACTLOGIX ANALOG INPUT MODULE, 4 CHANNEL	1769-IF4
6	1	ALLEN-BRADLEY COMPACTLOGIX POWER SUPPLY	1769-PA4
7	1	ALLEN-BRADLEY COMPACTLOGIX RIGHT END CAP	1769-ECR
8	3	CATEGORY 6E PATCH ETHERNET PATCH CABLES (LEGTH AS REQUIRED)	
9	1	RED LION N-TRON COPPER TO FIBER CONVERTER, SC CONNECTORS	120MC-SC
10	1	ALLEN-BRADLEY STRATIX 2000 UNMANAGED SWITCH, 5 ETHERNET COPPER PORTS	1783-US5TG
11	1	ALLEN-BRADLEY PANELVIEW PLUS 7 PERFORMANCE TERMINAL	2711P-T7C22D9P

GLOBAL NOTES:

1. ALL EXISTING IO POINTS ARE CONNECTED TO TERMINALS OR SURGE SUPRRESSION DEVICES, DISCONNECT AND LABEL ALL CONDUCTORS FROM EXISTING IO MODULES, CONNECT TO THE LIKE PHYSICAL POINT ON NEW IO MOUDLES. REFER TO EXISTING SYSTEM WIRING DIAGRAMS.
2. CONTRACTOR SHALL UTILIZE EXISTING SYSTEM WIRING DIAGRAMS AND PREPARE NEW RECORD IO DRAWINGS IN AUTOCAD 2023 FORMAT WITH FULL IO POINT DOCUMENTATION. CONTRACTOR SHALL FURNISH TO THE OWNER ELECTRONIC COPIES OF IO DRAWINGS IN PDF AND EDITABLE AUTOCAD FORMAT.

Gaines, Williams & Associates, Inc.
Engineers
P.O. Box 38688
Germantown, Tennessee 38183-0688
PHONE: 901-756-9065
www.gaineswilliams.com

Smith Seckman Reid, Inc.
655 Primacy Parkway
Suite 401
Memphis, TN 38119
(901) 683-3900
FAX: (901) 683-3990
www.ssr-inc.com

SSR Project #:22640820

ROBERT S. GAINES
PROFESSIONAL ENGINEER
AGRICULTURE
STATE OF TENNESSEE
04/11/25

REVISIONS

REV	DATE	DESCRIPTION

CITY OF DYERSBURG, TENNESSEE

DYERSBURG WATER SYSTEM
SCADA UPGRADES

DRAWN BY	RSG
DESIGNED BY	RSG
CHECKED BY	RSG

SHEET TITLE

ROGER HAWKINS WTP CHEMICAL FEED CONTROL PANEL PLC REPLACEMENT

DATE
APRIL 11, 2025

PROJECT STATUS
BID SET

SHEET NUMBER
I1.04

Copyright 2021 By Smith Seckman Reid, Inc. All rights reserved. This document

4/9/2025 1:25:13 PM C:\Documents\PROJECTS\Dyersburg\SCADA Upgrade\DWGS\241104E1104.dwg

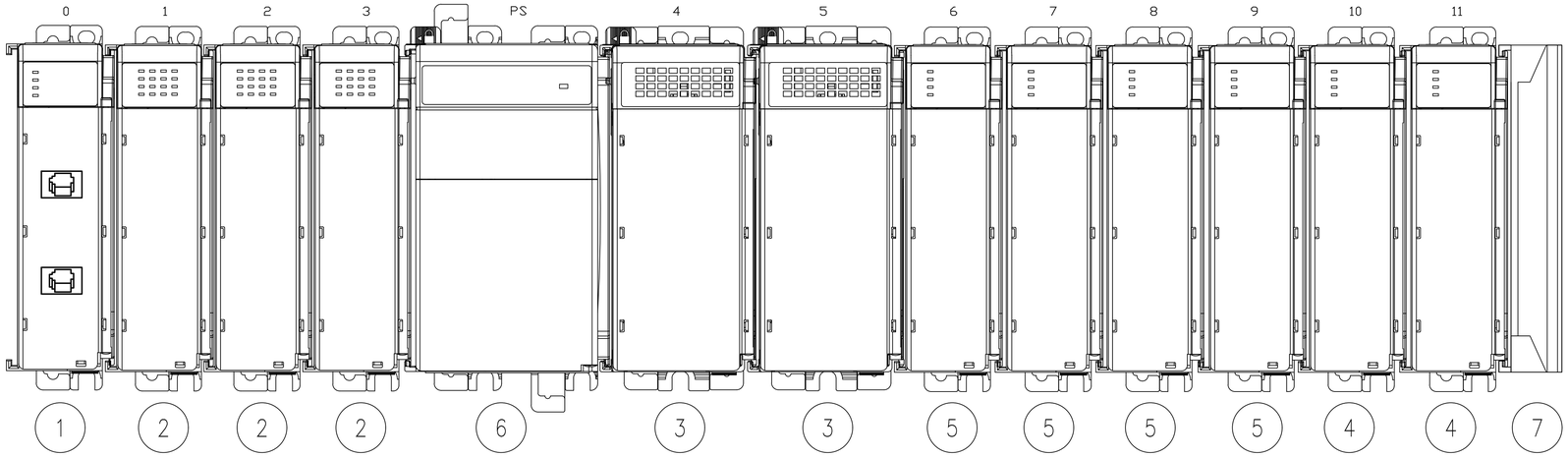

NEW PLC CHASSIS 1 DETAIL

(TYPICAL 2 FILTER CONSOLES)
NOT TO SCALE

NOTE:

1. ALL ITEMS LISTED SHALL BE FURNISHED AS LISTED, NO EXCEPTIONS AS THEY ARE LIKE REPLACEMENTS OF THE EXISTING ALLEN-BRADLEY SLC IO.
2. THE CONTRACTOR SHALL LABEL AND DISCONNECT CONTROL WIRING FROM EXISTING PLC TERMINALS.
3. THE CONTRACTOR SHALL REMOVE EXISTING PLC FROM EXISTING ENCLOSURE.
4. THE CONTRACTOR SHALL INSTALL NEW PLC IN EXISTING ENCLOSURE.
5. THE CONTRACTOR SHALL RECONNECT EXISTING WIRING TO NEW PLC IO TERMINALS IN THE SAME IO LOCATION AS PREVIOUS ON SLC IO.
6. FURNISH AND INSTALL NEW ALLEN-BRADLEY ETHERNET SWITCH IN PANEL..
7. REMOVE EXISTING OPERATOR INTERFACE TERMINALS, FURNISH AND INSTALL NEW PANELVIEW 7 PLUS TERMINALS.

FILTER CONSOLES 1 & 2 PLC PANEL

NO.	QTY.	DESCRIPTION	PART NO.
1	2	ALLEN-BRADLEY COMPACTLOGIX PROCESSOR	1769-L33ER
2	6	ALLEN-BRADLEY COMPACTLOGIX INPUT MODULE, 120VAC, 16 POINT	1769-IA16
3	4	ALLEN-BRADLEY COMPACTLOGIX OUTPUT MOUDLE, 120VAC, 16 POINT	1769-OA16
4	4	ALLEN-BRADLEY COMPACTLOGIX ANALOG OUTPUT MODULE, 4 CHANNEL	1769-OF4
5	8	ALLEN-BRADLEY COMPACTLOGIX ANALOG INPUT MODULE, 4 CHANNEL	1769-IF4
6	2	ALLEN-BRADLEY COMPACTLOGIX POWER SUPPLY	1769-PA4
7	2	ALLEN-BRADLEY COMPACTLOGIX RIGHT END CAP	1769-ECR
8	6	CATEGORY 6E PATCH ETHERNET PATCH CABLES (LEGTH AS REQUIRED)	
9			
10	2	ALLEN-BRADLEY STRATIX 2000 UNMANAGED SWITCH, 5 ETHERNET COPPER PORTS	1783-US5TG
11	2	ALLEN-BRADLEY PANELVIEW PLUS 7 PERFORMANCE TERMINAL	2711P-T7C22D9P

GLOBAL NOTES:

1. ALL EXISTING IO POINTS ARE CONNECTED TO TERMINALS OR SURGE SUPRRESSION DEVICES, DISCONNECT AND LABEL ALL CONDUCTORS FROM EXISTING IO MODULES, CONNECT TO THE LIKE PHYSICAL POINT ON NEW IO MOUDLES. REFER TO EXISTING SYSTEM WIRING DIAGRAMS.
2. CONTRACTOR SHALL UTILIZE EXISTING SYSTEM WIRING DIAGRAMS AND PREPARE NEW RECORD IO DRAWINGS IN AUTOCAD 2023 FORMAT WITH FULL IO POINT DOCUMENTATION. CONTRACTOR SHALL FURNISH TO THE OWNER ELECTRONIC COPIES OF IO DRAWINGS IN PDF AND EDITABLE AUTOCAD FORMAT.

Gaines, Williams & Associates, Inc.
Engineers
P.O. Box 38688
Germantown, Tennessee 38183-0688
PHONE: 901-756-9065
www.gaineswilliams.com

Smith Seckman Reid, Inc.
655 Primacy Parkway
Suite 401
Memphis, TN 38119
(901) 683-3900
FAX: (901) 683-3990
www.ssr-inc.com

SSR Project #:22640820

04/11/25

REVISIONS

REV	DATE	DESCRIPTION

CITY OF DYERSBURG, TENNESSEE
DYERSBURG WATER SYSTEM
SCADA UPGRADES

DRAWN BY	RSG
DESIGNED BY	RSG
CHECKED BY	RSG

SHEET TITLE

ROGER HAWKINS WTP FILTER CONSOLES PLC REPLACEMENT

DATE
APRIL 11, 2025

PROJECT STATUS
BID SET

SHEET NUMBER
I1.05

Copyright 2023 By Smith Seckman Reid, Inc. All rights reserved. This document

C:\Documents\PROJECTS\Dyersburg\SCADA Upgrade\DWGS\241104E105.dwg

4/9/2025 1:25:21 PM

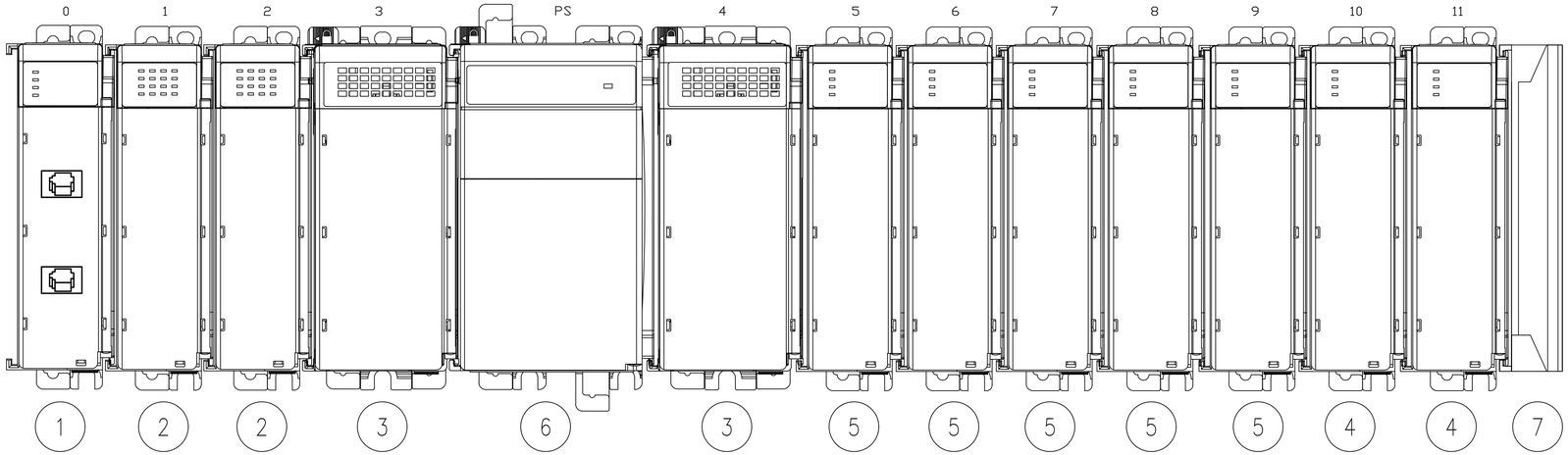

NEW PLC CHASSIS 1 DETAIL

NOT TO SCALE

NOTE:

1. ALL ITEMS LISTED SHALL BE FURNISHED AS LISTED, NO EXCEPTIONS AS THEY ARE LIKE REPLACEMENTS OF THE EXISTING ALLEN–BRADLEY SLC IO.
2. THE CONTRACTOR SHALL LABEL AND DISCONNECT CONTROL WIRING FROM EXISTING PLC TERMINALS.
3. THE CONTRACTOR SHALL REMOVE EXISTING PLC FROM EXISTING ENCLOSURE.
4. THE CONTRACTOR SHALL INSTALL NEW PLC IN EXISTING ENCLOSURE.
5. THE CONTRACTOR SHALL RECONNECT EXISTING WIRING TO NEW PLC IO TERMINALS IN THE SAME IO LOCATION AS PREVIOUS ON SLC IO.
6. FURNISH AND INSTALL NEW ALLEN–BRADLEY ETHERNET SWITCH IN PANEL..
7. REMOVE EXISTING OPERATOR INTERFACE TERMINALS, FURNISH AND INSTALL NEW PANELVIEW 7 PLUS TERMINALS.

DOWNTOWN WTP MAIN PLC PANEL

NO.	QTY.	DESCRIPTION	PART NO.
1	1	ALLEN-BRADLEY COMPACTLOGIX PROCESSOR	1769-L33ER
2	2	ALLEN-BRADLEY COMPACTLOGIX INPUT MODULE, 120VAC, 16 POINT	1769-IA16
3	2	ALLEN-BRADLEY COMPACTLOGIX OUTPUT MOUDLE, 120VAC, 16 POINT	1769-OA16
4	2	ALLEN-BRADLEY COMPACTLOGIX ANALOG OUTPUT MODULE, 4 CHANNEL	1769-OF4
5	5	ALLEN-BRADLEY COMPACTLOGIX ANALOG INPUT MODULE, 4 CHANNEL	1769-IF4
6	1	ALLEN-BRADLEY COMPACTLOGIX POWER SUPPLY	1769-PA4
7	1	ALLEN-BRADLEY COMPACTLOGIX RIGHT END CAP	1769-ECR
8	3	CATEGORY 6E PATCH ETHERNET PATCH CABLES (LEGTH AS REQUIRED)	
9			
10	1	ALLEN-BRADLEY STRATIX 2000 UNMANAGED SWITCH, 5 ETHERNET COPPER PORTS	1783-US5TG
11	1	ALLEN-BRADLEY PANELVIEW PLUS 7 PERFORMANCE TERMINAL	2711P-T7C22D9P

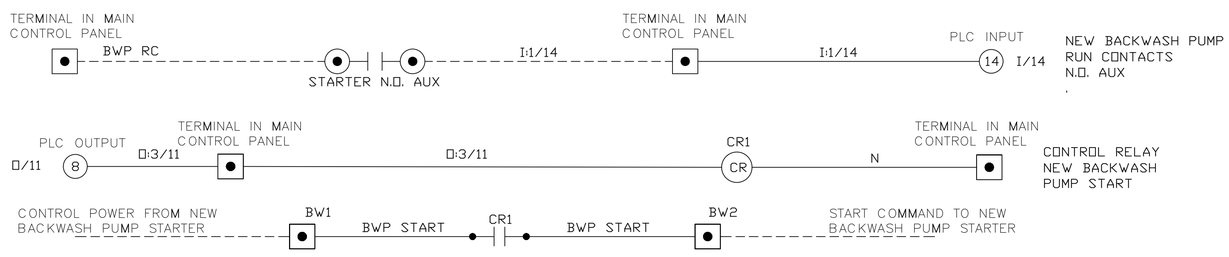

NEW BACKWASH PUMP NOTES:

1. FURNISH AND INSTALL NEW ALLEN–BRADLEY RELAY 700–HK32A1 AND BASE 700–HN122 IN MAIN CONTROL PANEL.
2. FURNISH AND INSTALL NEW CONTROL WIRING BETWEEN MAIN CONTROL PANEL AND NEW STARTER. SEE ELECTRICAL PLANS.

GLOBAL NOTES:

1. ALL EXISTING IO POINTS ARE CONNECTED TO TERMINALS OR SURGE SUPRRESSION DEVICES, DISCONNECT AND LABEL ALL CONDUCTORS FROM EXISTING IO MODULES, CONNECT TO THE LIKE PHYSICAL POINT ON NEW IO MOUDLES. REFER TO EXISTING SYSTEM WIRING DIAGRAMS.
2. CONTRACTOR SHALL UTILIZE EXISTING SYSTEM WIRING DIAGRAMS AND PREPARE NEW RECORD IO DRAWINGS IN AUTOCAD 2023 FORMAT WITH FULL IO POINT DOCUMENTATION. CONTRACTOR SHALL FURNISH TO THE OWNER ELECTRONIC COPIES OF IO DRAWINGS IN PDF AND EDITABLE AUTOCAD FORMAT.

Gaines, Williams & Associates, Inc.
Engineers
P.O. Box 38688
Germantown, Tennessee 38183-0688
PHONE: 901-756-9065
www.gaineswilliams.com

Smith Seckman Reid, Inc.
655 Primacy Parkway
Suite 401
Memphis, TN 38119
(901) 683-3900
FAX: (901) 683-3990
www.ssr-inc.com

SSR Project #:22640820

ROBERT S. GAINES
PROFESSIONAL ENGINEER
AGRICULTURE
COMMERCE
STATE OF TENNESSEE
04/11/25

REVISIONS

REV	DATE	DESCRIPTION

CITY OF DYERSBURG, TENNESSEE

DYERSBURG WATER SYSTEM
SCADA UPGRADES

DRAWN BY	RSG
DESIGNED BY	RSG
CHECKED BY	RSG

SHEET TITLE

DOWNTOWN WTP MAIN CONTROL PANEL PLC REPLACEMENT

DATE
APRIL 11, 2025

PROJECT STATUS
BID SET

SHEET NUMBER
I1.06

Copyright 2021 By Smith Seckman Reid, Inc. All rights reserved. This document

C:\Documents\PROJECTS\Dyersburg\SCADA Upgrade\DWGS\241104E1106.dwg
4/9/2025 1:25:30 PM

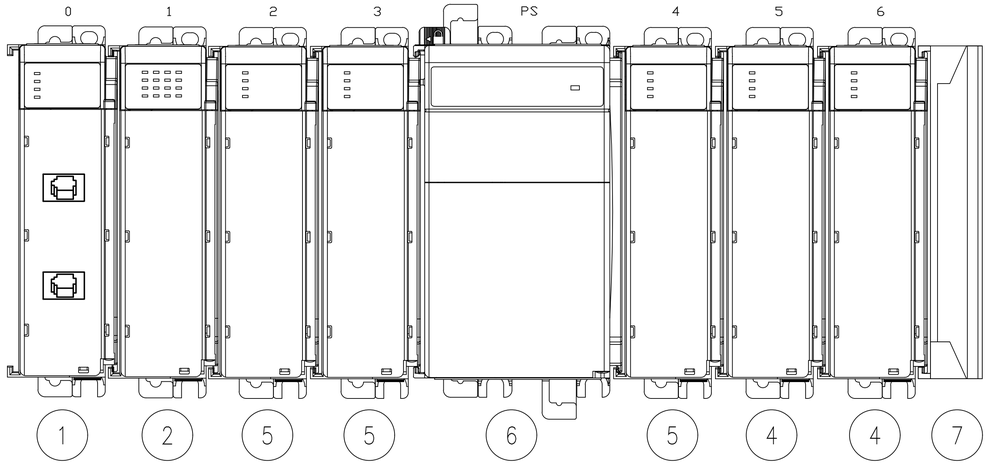

NEW PLC CHASSIS 1 DETAIL

NOT TO SCALE

NOTE:

1. ALL ITEMS LISTED SHALL BE FURNISHED AS LISTED, NO EXCEPTIONS AS THEY ARE LIKE REPLACEMENTS OF THE EXISTING ALLEN–BRADLEY SLC IO.
2. THE CONTRACTOR SHALL LABEL AND DISCONNECT CONTROL WIRING FROM EXISTING PLC TERMINALS.
3. THE CONTRACTOR SHALL REMOVE EXISTING PLC FROM EXISTING ENCLOSURE.
4. THE CONTRACTOR SHALL INSTALL NEW PLC IN EXISTING ENCLOSURE.
5. THE CONTRACTOR SHALL RECONNECT EXISTING WIRING TO NEW PLC IO TERMINALS IN THE SAME IO LOCATION AS PREVIOUS ON SLC IO.
6. FURNISH AND INSTALL NEW ALLEN–BRADLEY ETHERNET SWITCH IN PANEL..
7. REMOVE EXISTING OPERATOR INTERFACE TERMINALS, FURNISH AND INSTALL NEW PANELVIEW 7 PLUS TERMINALS.

DOWNTOWN WTP EFFLUENT FLOW PLC PANEL

NO.	QTY.	DESCRIPTION	PART NO.
1	1	ALLEN-BRADLEY COMPACTLOGIX PROCESSOR	1769-L33ER
2	2	ALLEN-BRADLEY COMPACTLOGIX INPUT MODULE, 120VAC, 16 POINT	1769-IA16
3	2	ALLEN-BRADLEY COMPACTLOGIX OUTPUT MOUDLE, 120VAC, 16 POINT	1769-OA16
4	2	ALLEN-BRADLEY COMPACTLOGIX ANALOG OUTPUT MODULE, 4 CHANNEL	1769-OF4
5	5	ALLEN-BRADLEY COMPACTLOGIX ANALOG INPUT MODULE, 4 CHANNEL	1769-IF4
6	1	ALLEN-BRADLEY COMPACTLOGIX POWER SUPPLY	1769-PA4
7	1	ALLEN-BRADLEY COMPACTLOGIX RIGHT END CAP	1769-ECR
8	3	CATEGORY 6E PATCH ETHERNET PATCH CABLES (LEGTH AS REQUIRED)	
9			
10	1	ALLEN-BRADLEY STRATIX 2000 UNMANAGED SWITCH, 5 ETHERNET COPPER PORTS	1783-US5TG
11	1	ALLEN-BRADLEY PANELVIEW PLUS 7 PERFORMANCE TERMINAL	2711P-T7C22D9P

GLOBAL NOTES:

1. ALL EXISTING IO POINTS ARE CONNECTED TO TERMINALS OR SURGE SUPRRESSION DEVICES, DISCONNECT AND LABEL ALL CONDUCTORS FROM EXISTING IO MODULES, CONNECT TO THE LIKE PHYSICAL POINT ON NEW IO MOUDLES. REFER TO EXISTING SYSTEM WIRING DIAGRAMS.
2. CONTRACTOR SHALL UTILIZE EXISTING SYSTEM WIRING DIAGRAMS AND PREPARE NEW RECORD IO DRAWINGS IN AUTOCAD 2023 FORMAT WITH FULL IO POINT DOCUMENTATION. CONTRACTOR SHALL FURNISH TO THE OWNER ELECTRONIC COPIES OF IO DRAWINGS IN PDF AND EDITABLE AUTOCAD FORMAT.

Gaines, Williams & Associates, Inc.
Engineers
P.O. Box 38688
Germantown, Tennessee 38183-0688
PHONE: 901-756-9065
www.gaineswilliams.com

Smith Seckman Reid, Inc.
655 Primacy Parkway
Suite 401
Memphis, TN 38119
(901) 683-3900
FAX: (901) 683-3990
www.ssr-inc.com

SSR Project #:22640820

ROBERT S. GAINES
PROFESSIONAL ENGINEER
AGRICULTURE
STATE OF TENNESSEE
04/11/25

REVISIONS

REV	DATE	DESCRIPTION

CITY OF DYERSBURG, TENNESSEE
DYERSBURG WATER SYSTEM
SCADA UPGRADES

DRAWN BY	RSG
DESIGNED BY	RSG
CHECKED BY	RSG

SHEET TITLE

DOWNTOWN WTP EFFLUENT FLOW CONTROL PANEL PLC REPLACEMENT

DATE
APRIL 11, 2025

PROJECT STATUS
BID SET

SHEET NUMBER
I1.07

Copyright 2021 By Smith Seckman Reid, Inc. All rights reserved. This document

4/9/2025 1:25:34 PM C:\Documents\PROJECTS\Dyersburg\SCADA Upgrade\DWGS\241104EI107.dwg

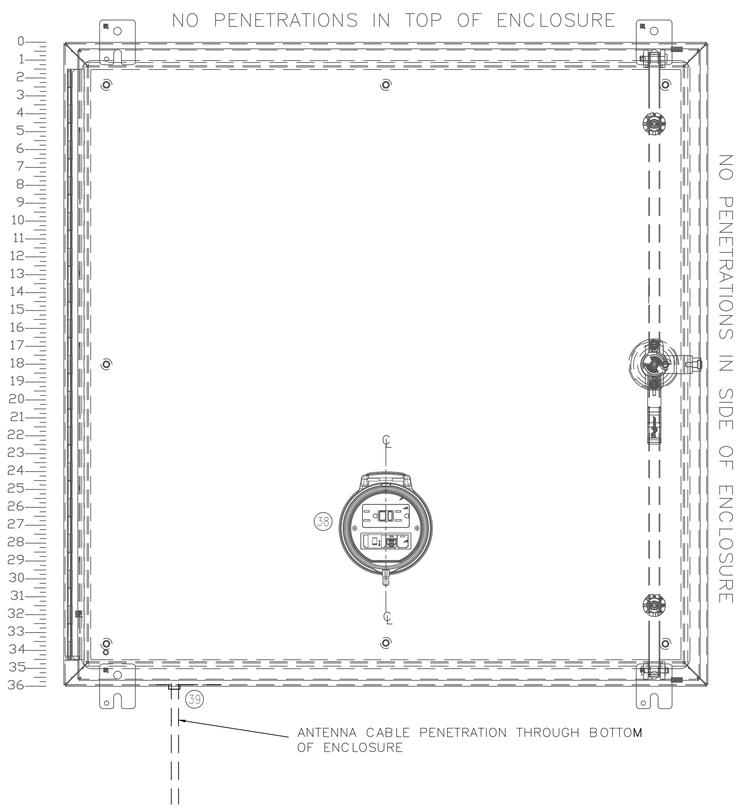

BOOSTER PUMP STATION
RTU CONTROL PANEL
EXTERIOR DETAIL

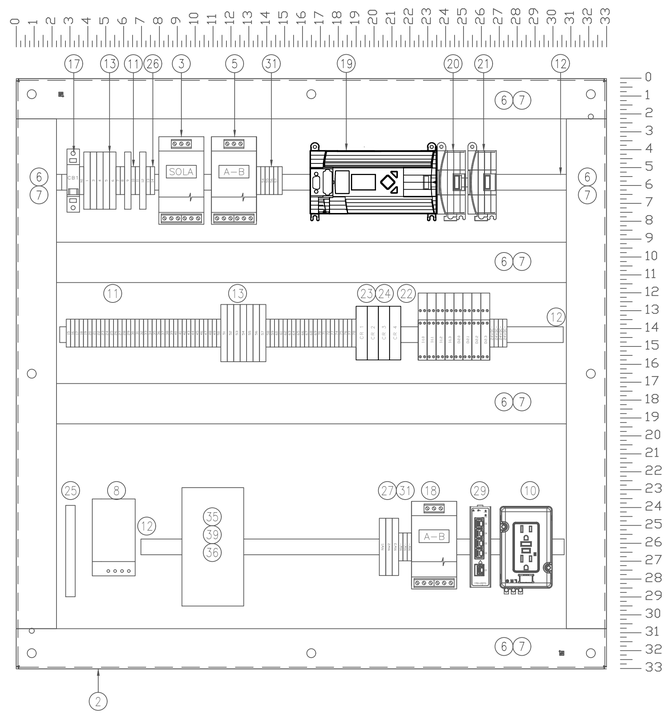

BOOSTER PUMP STATION
RTU CONTROL PANEL
INTERIOR DETAIL

BOOSTER PUMP RTU PANEL BILL OF MATERIALS

NO.	QTY.	DESCRIPTION	PART NO.
1	1	HOFFMAN NEMA 4X STAINLESS STEEL ENCLOSURE W/3 POINT LATCH	A-36H3612SSLP3PT
2	1	HOFFMAN SUBPANEL	A36P36
3	1	SOLA, SURGE SUPPRESSOR	STV25K-10S
4	1	SOLA, UPS 120 VAC INPUT / 120 VAC OUTPUT, DIN RAIL MOUNT	SDU500
5	1	ALLEN-BRADLEY COMPACT POWER SUPPLY, 72W, 120VAC INPUT/24VDC OUTPUT	1606-XLP72E
6	18	PANDUIT, 2"X2" WHITE WIREWAY	F2X2WH6
7	18	PANDUIT, 2" WIRE DUCT COVER	C2WH6
8	1	HOFFMAN TOUCH SAFE HEATER 50 WATT, 115 VAC	DAH501TS
9	4	PATCH CORD, 3', RJ45M TO RJ45M, CAT 5e, STRAIGHT PIN	
10	1	ALLEN-BRALEY, DIN RAIL MOUNT DUPLEX RECEPTACLE, 15 AMP	1492-REC15
11	80	ALLEN-BRADLEY, TERMINALS, GRAY	1492-J4
12	3	ALLEN-BRADLEY, SYMETRICAL STEEL DIN RAIL	199-DR1
13	18	ALLEN-BRADLEY, FUSED TERMINAL BLOCK WITH NEON BLOWN FUSE INDICATOR, 120 VAC	1492-H4
14	10	ALLEN-BRADLEY, TERMINAL END BARRIER	1492-EBJ3
15	6	ALLEN-BRADLEY, FUSED TERMINAL END BARRIER	1492-N37
16	20	ALLEN-BRADLEY, HEAVY DUTY TERMINAL END ANCHOR	1492-EAHJ35
17	1	ALLEN-BRADLEY, CIRCUIT BREAKER, 15 AMP, SINGLE POLE	1492SP1C150
18	1	ALLEN-BRADLEY COMPACT POWER SUPPLY, 50W, 120VAC INPUT/24VDC OUTPUT	1606-XLP50E
19	1	ALLEN-BRADLEY, MICROLOGIX 1400 PROCESSOR	1766-L32AWA
20	1	ALLEN-BRADLEY, MICROLOGIX ANALOG INPUT MODULE	1762-IF4
21	1	ALLEN-BRADLEY, MICROLOGIX ANALOG OUTPUT MODULE	1762-OF4
22	8	ALLEN-BRADLEY ANALOG SURGE SUPPRESSOR	4983-DD24
23	4	ALLEN-BRADLEY, RELAY, DPDT, 120 VAC	700-HK32A1
24	4	ALLEN-BRADLEY, RELAY BASE	700-HN122
25	1	SIEMENS GROUND BAR	GB10
26	10	ALLEN-BRADLEY, GROUND TERMINAL	1492-JG3
27	3	ALLEN-BRADLEY, FUSED TERMINAL BLOCK WITH BLOWN FUSE INDICATOR, 24 VDC	1492-H5
28			
29	1	ALLEN-BRADLEY STRATIX 2000 UNMANAGED SWITCH, 5 ETHERNET COPPER PORTS	1783-US5TG
30			
31	16	ALLEN-BRADLEY, TERMINALS, BLUE	1492-J4B
32			
33	1	GRACE ENGINEERING PRODUCTS PANEL INTERFACE CONNECTOR W/CAT. 5e RJ45, PANEL MOUNT HOUSING, UL TYPE 4, GFCI DUPLEX INSIDE-OUTLET, 3 AMP CB	P-R2-K3RF3
34	2	KELE SPLIT CORE CURRENT TRANSDUCER, 2 WIRE LOOP POWERED, 4-20mA OUTPUT (SHIPPED LOOSE, FIELD INSTALLED)	SCX420200
35	1	DIGI CELLULAR ROUTER WITH POWER SUPPLY, AT&T SERVICE PROVIDER	IX10-00N4
36	1	DIGI AC POWER SUPPLY, EXTENDED TEMPERATURE	76002104
37	1	PANORAMA ANTENNAS PERMANENT MOUNT WIRELESS N - MIMO CELL & GPS BLACK	LP-IN1958-B
38	1	WPS ANTENNAS 5' EXTENSION CABLE RG58U LOW LOSS FOAM COAX, N-MALE TO SMA FEMALE OR EQUAL	RG58U-5-NMSM
39	1	DIGI DIN RAIL CLIP KIT	76002095

Gaines, Williams & Associates, Inc.
Engineers
P.O. Box 38688
Germantown, Tennessee 38183-0688
PHONE: 901-756-9065
www.gaineswilliams.com

Smith Seckman Reid, Inc.
655 Primacy Parkway
Suite 401
Memphis, TN 38119
(901) 683-3900
FAX: (901) 683-3990
www.ssr-inc.com

SSR Project #:22640820

ROBERT S. GAINES
PROFESSIONAL ENGINEER
AGRICULTURE
COMMERCE
STATE OF TENNESSEE
04/11/25

REVISIONS

REV	DATE	DESCRIPTION

CITY OF DYERSBURG, TENNESSEE
DYERSBURG WATER SYSTEM
SCADA UPGRADES

DRAWN BY	RSG
DESIGNED BY	RSG
CHECKED BY	RSG

SHEET TITLE
HURRICANE BOOSTER PUMP RTU PANEL EXTERNAL & INTERNAL DETAILS

DATE
APRIL 11, 2025

PROJECT STATUS
BID SET

SHEET NUMBER
I1.08

Copyright 2023 By Smith Seckman Reid Inc. All rights reserved. This document

4/9/2025 1:25:40 PM C:\Documents\PROJECTS\Dyersburg\SCADA Upgrade\DWGS\2410\4EI108.dwg

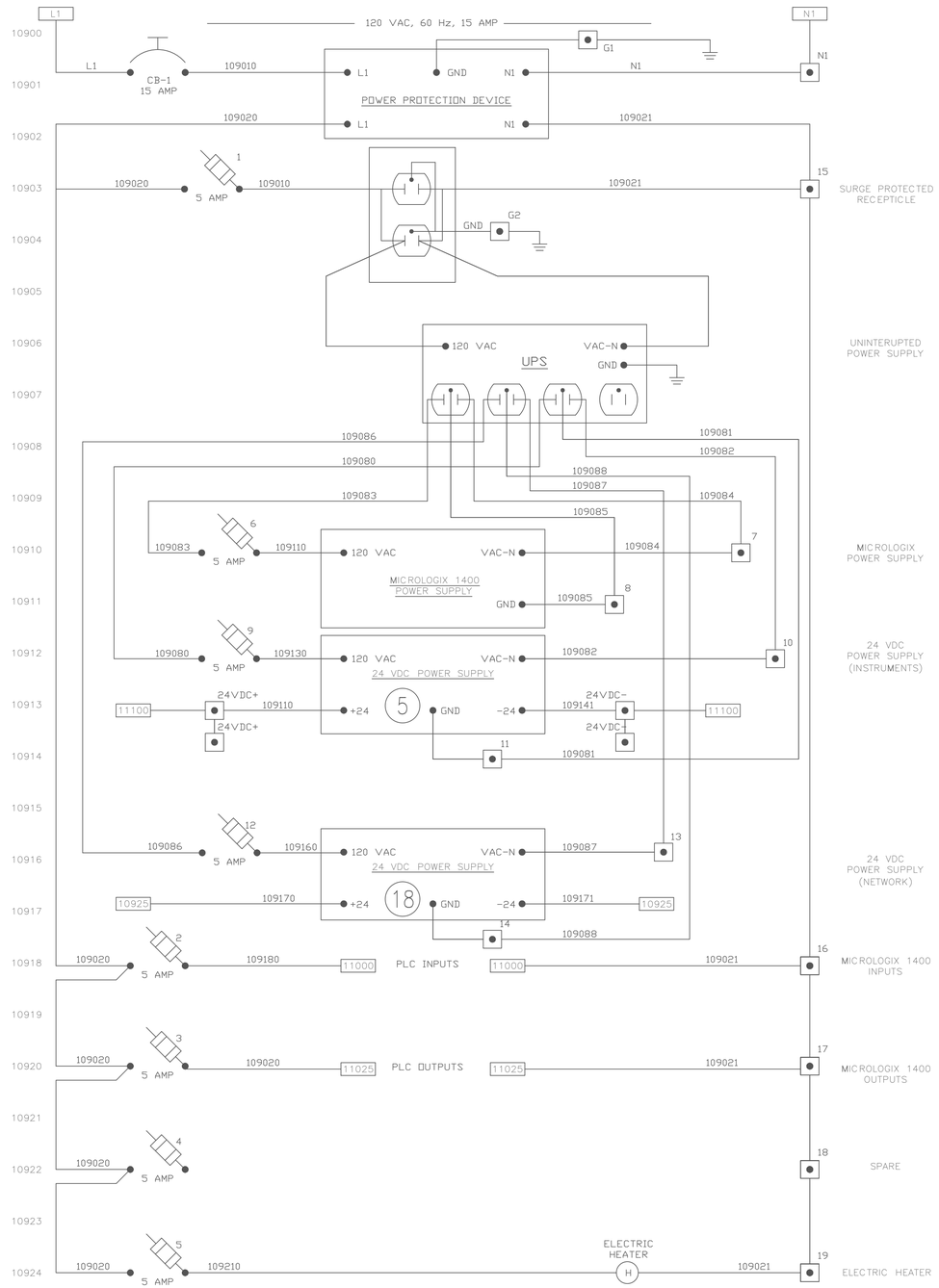

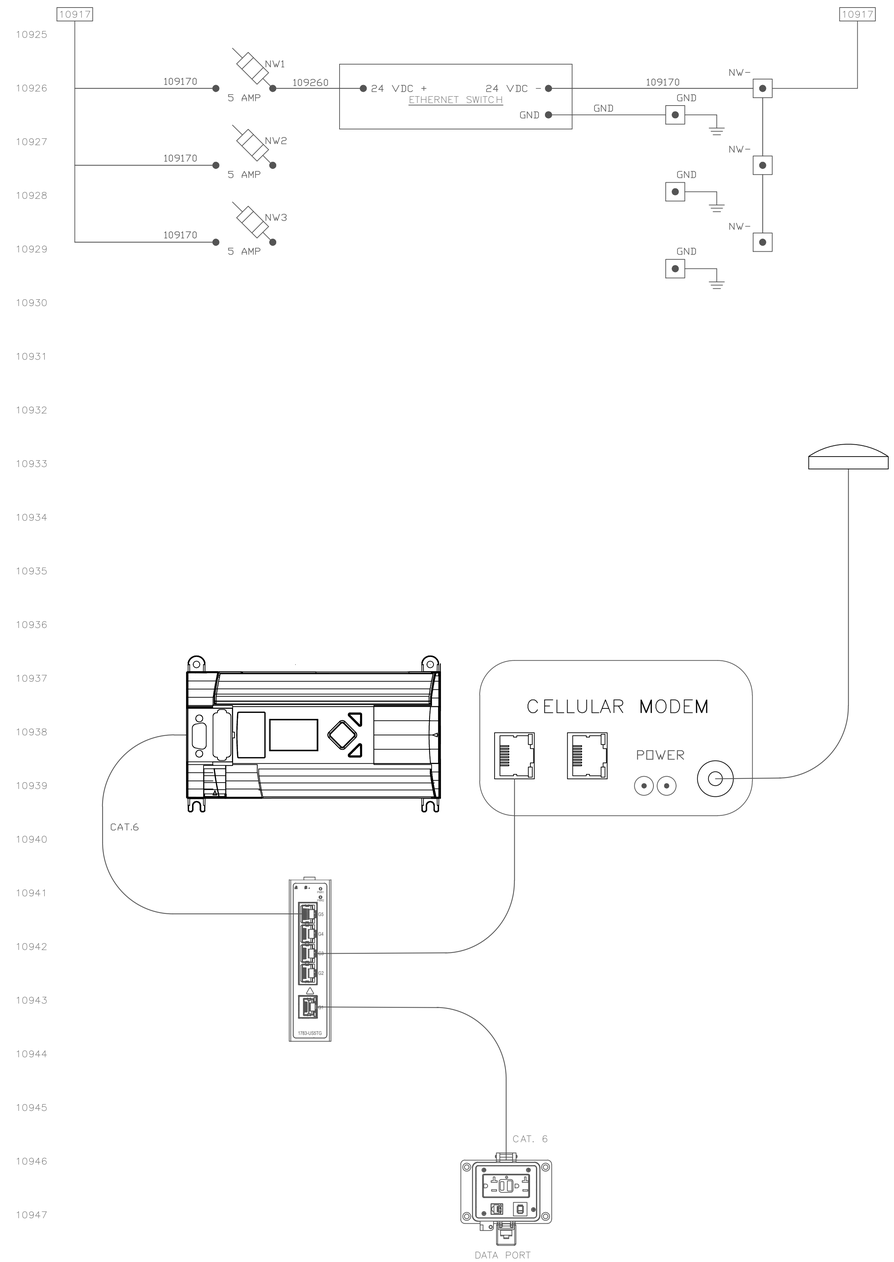

SSR Smith Seckman Reid, Inc.
655 Primacy Parkway
Suite 401
Memphis, TN 38119
(901) 683-3900
FAX: (901) 683-3990
www.ssr-inc.com

SSR Project #:22640820

ROBERT S. GAINES, JR. NATIONAL REGISTRATION AGRICULTURE COMMERCE STATE OF TENNESSEE
04/11/25

REV	DATE	DESCRIPTION

REVISIONS

CITY OF DYERSBURG, TENNESSEE
DYERSBURG WATER SYSTEM
SCADA UPGRADES

DRAWN BY	RSG
DESIGNED BY	RSG
CHECKED BY	RSG

SHEET TITLE

HURRICANE BOOSTER PUMP RTU PANEL POWER DISTRIBUTION

DATE
APRIL 11, 2025

PROJECT STATUS
BID SET

SHEET NUMBER
I1.09

Gaines, Williams & Associates, Inc.
Engineers
P.O. Box 38688
Germantown, Tennessee 38183-0688
PHONE: 901-756-9065
www.gaineswilliams.com

Copyright 2021 By Smith Seckman Reid Inc. All rights reserved. This document

4/9/2025 1:25:52 PM C:\Documents\PROJECTS\Dyersburg\SCADA Upgrade\DWGS\24104EI109.dwg

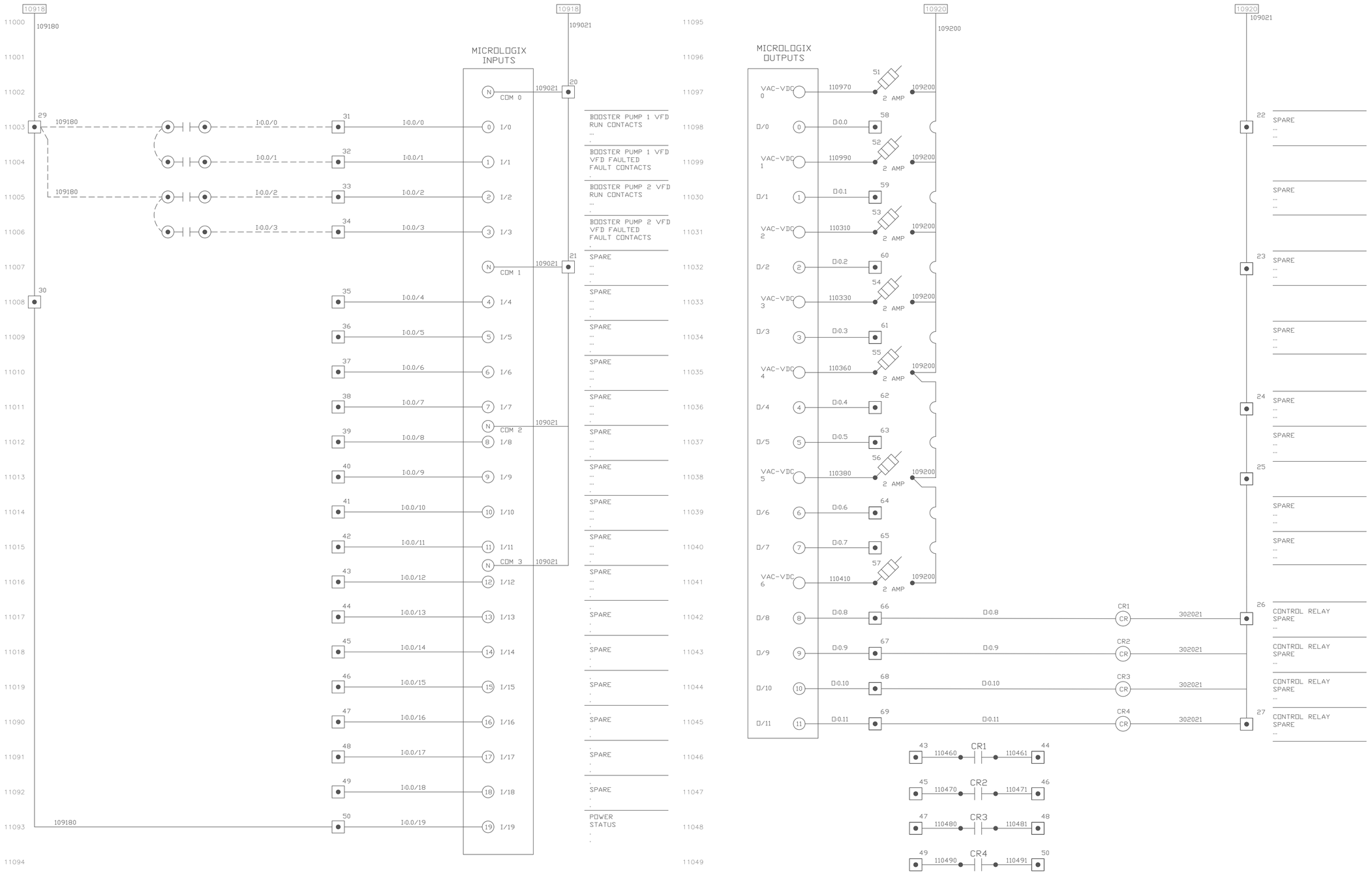

Smith Seckman Reid, Inc.
655 Primacy Parkway
Suite 401
Memphis, TN 38119
(901) 683-3900
FAX: (901) 683-3990
www.ssr-inc.com

SSR Project #:22640820

ROBERT S. GAINES
PROFESSIONAL ENGINEER
AGRICULTURE
CONVERSE
STATE OF TENNESSEE
04/11/25

REV	DATE	DESCRIPTION

REVISIONS

CITY OF DYERSBURG, TENNESSEE

DYERSBURG WATER SYSTEM SCADA UPGRADES

DRAWN BY	RSG
DESIGNED BY	RSG
CHECKED BY	RSG

SHEET TITLE

HURRICANE BOOSTER PUMP RTU PANEL INPUT & OUTPUT WIRING

DATE
APRIL 11, 2025

PROJECT STATUS
BID SET

SHEET NUMBER
I1.10

Gaines, Williams & Associates, Inc.
Engineers
P.O. Box 38688
Germantown, Tennessee 38183-0688
PHONE: 901-756-9065
www.gainewilliams.com

Copyright 2021 By Smith Seckman Reid, Inc. All rights reserved. This document, or parts thereof, may not be reproduced in any form without written permission.

4/9/2025 1:26:02 PM C:\Documents\PROJECTS\Dyersburg\SCADA Upgrade\DWGS\24104EI110.dwg

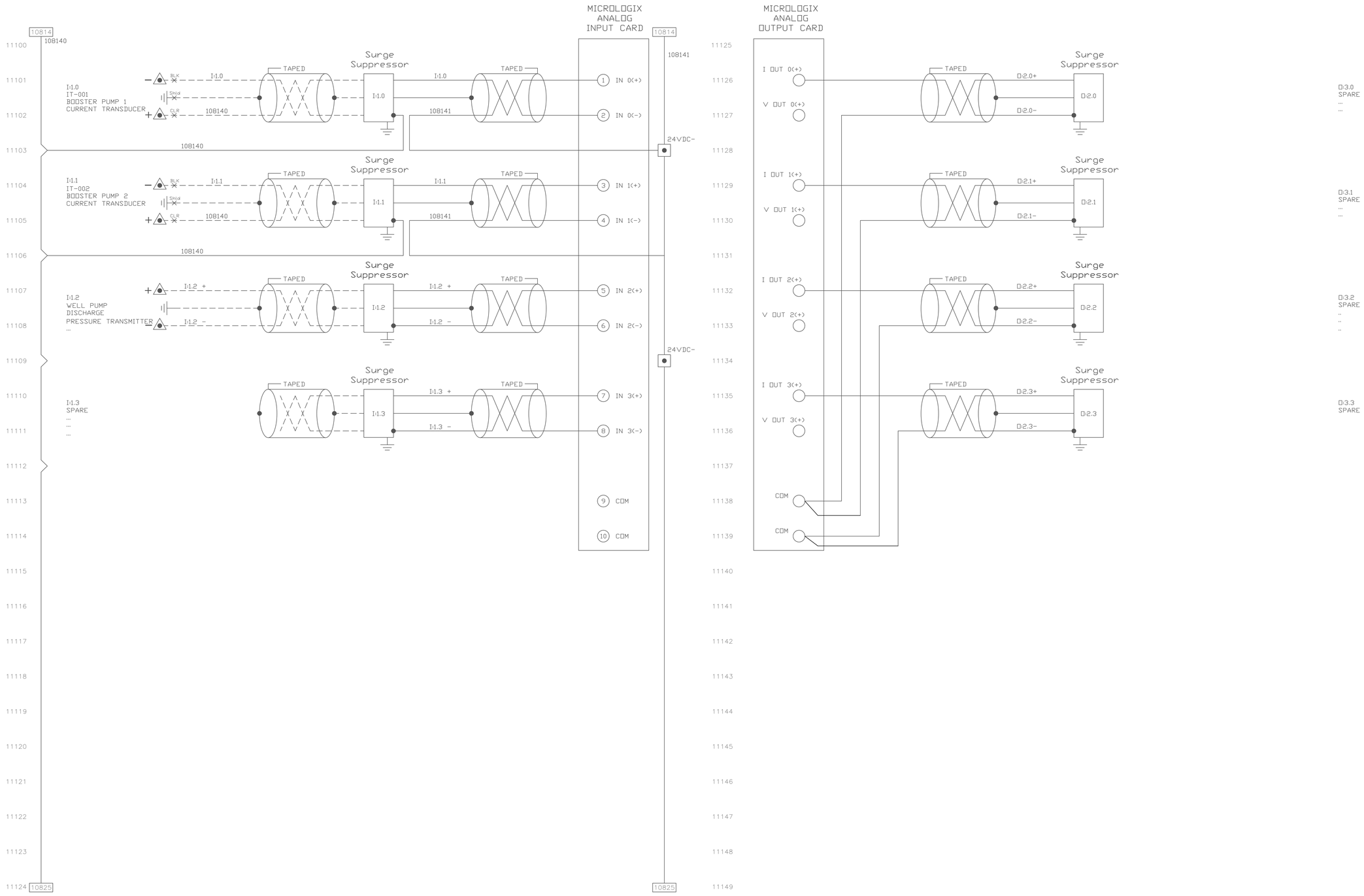

SSR Smith Seckman Reid, Inc.
655 Primacy Parkway
Suite 401
Memphis, TN 38119
(901) 683-3900
FAX: (901) 683-3990
www.ssr-inc.com

SSR Project #:22640820

04/11/25

REVISIONS

REV	DATE	DESCRIPTION

CITY OF DYERSBURG, TENNESSEE

DYERSBURG WATER SYSTEM SCADA UPGRADES

DRAWN BY	RSG
DESIGNED BY	RSG
CHECKED BY	RSG

SHEET TITLE

HURRICANE BOOSTER PUMP RTU PANEL ANALOG INPUT/OUTPUT WIRING

DATE
APRIL 11, 2025

PROJECT STATUS
BID SET

SHEET NUMBER
I1.11

Gaines, Williams & Associates, Inc.
Engineers
P.O. Box 38688
Germantown, Tennessee 38183-0688
PHONE: 901-756-9065
www.gaineswilliams.com

Copyright 2021 By Smith Seckman Reid, Inc. All rights reserved. This document

C:\Documents\PROJECTS\Dyersburg\SCADA Upgrade\DWGS\241104E111.dwg

4/9/2025 1:26:08 PM

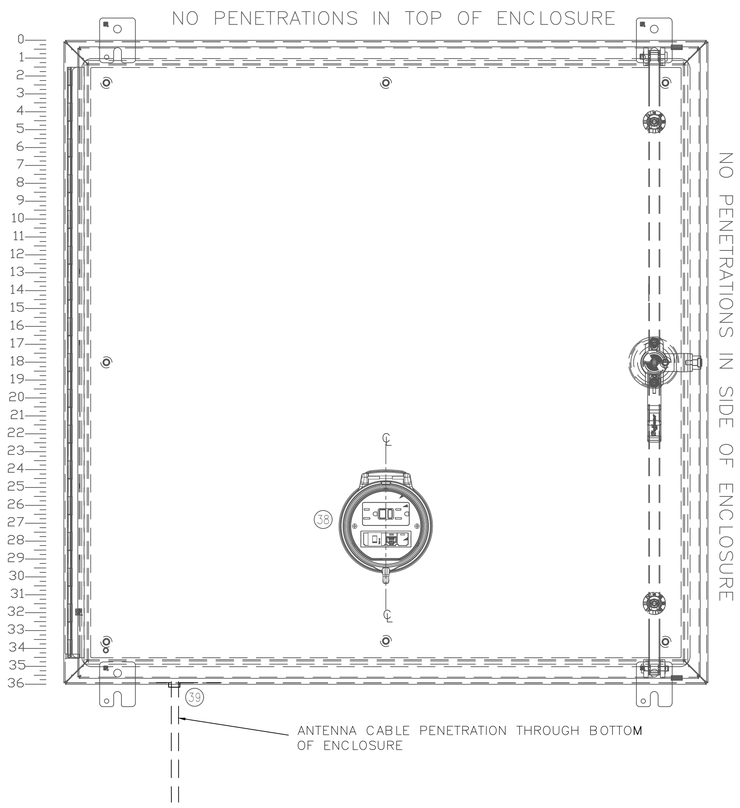

WELL PUMP 8
RTU CONTROL PANEL
EXTERIOR DETAIL

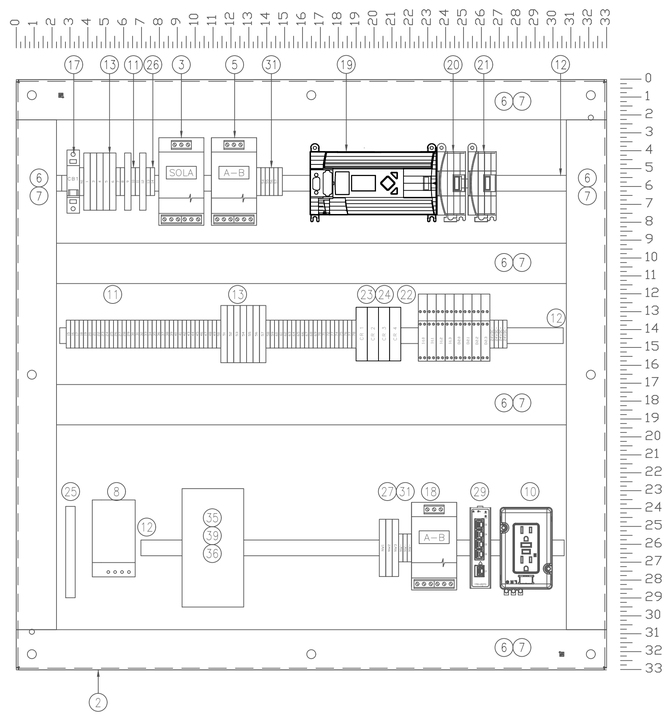

WELL PUMP 8
RTU CONTROL PANEL
INTERIOR DETAIL

WELL PUMP RTU PANEL BILL OF MATERIALS			
NO.	QTY.	DESCRIPTION	PART NO.
1	1	HOFFMAN NEMA 4X STAINLESS STEEL ENCLOSURE W/3 POINT LATCH	A-36H3612SSLP3PT
2	1	HOFFMAN SUBPANEL	A36P36
3	1	SOLA, SURGE SUPPRESSOR	STV25K-10S
4	1	SOLA, UPS 120 VAC INPUT / 120 VAC OUTPUT, DIN RAIL MOUNT	SDU500
5	1	ALLEN-BRADLEY COMPACT POWER SUPPLY, 72W, 120VAC INPUT/24VDC OUTPUT	1606-XLP72E
6	18	PANDUIT, 2"X2" WHITE WIREWAY	F2X2WH6
7	18	PANDUIT, 2" WIRE DUCT COVER	C2WH6
8	1	HOFFMAN TOUCH SAFE HEATER 50 WATT, 115 VAC	DAH501TS
9	4	PATCH CORD, 3', RJ45M TO RJ45M, CAT 5e, STRAIGHT PIN	
10	1	ALLEN-BRALEY, DIN RAIL MOUNT DUPLEX RECEPTACLE, 15 AMP	1492-REC15
11	80	ALLEN-BRADLEY, TERMINALS, GRAY	1492-J4
12	3	ALLEN-BRADLEY, SYMETRICAL STEEL DIN RAIL	199-DR1
13	18	ALLEN-BRADLEY, FUSED TERMINAL BLOCK WITH NEON BLOWN FUSE INDICATOR, 120 VAC	1492-H4
14	10	ALLEN-BRADLEY, TERMINAL END BARRIER	1492-EBJ3
15	6	ALLEN-BRADLEY, FUSED TERMINAL END BARRIER	1492-N37
16	20	ALLEN-BRADLEY, HEAVY DUTY TERMINAL END ANCHOR	1492-EAHJ35
17	1	ALLEN-BRADLEY, CIRCUIT BREAKER, 15 AMP, SINGLE POLE	1492SP1C150
18	1	ALLEN-BRADLEY COMPACT POWER SUPPLY, 50W, 120VAC INPUT/24VDC OUTPUT	1606-XLP50E
19	1	ALLEN-BRADLEY, MICROLOGIX 1400 PROCESSOR	1766-L32AWA
20	1	ALLEN-BRADLEY, MICROLOGIX ANALOG INPUT MODULE	1762-IF4
21	1	ALLEN-BRADLEY, MICROLOGIX ANALOG OUTPUT MODULE	1762-OF4
22	8	ALLEN-BRADLEY ANALOG SURGE SUPPRESSOR	4983-DD24
23	4	ALLEN-BRADLEY, RELAY, DPDT, 120 VAC	700-HK32A1
24	4	ALLEN-BRADLEY, RELAY BASE	700-HN122
25	1	SIEMENS GROUND BAR	GB10
26	10	ALLEN-BRADLEY, GROUND TERMINAL	1492-JG3
27	3	ALLEN-BRADLEY, FUSED TERMINAL BLOCK WITH BLOWN FUSE INDICATOR, 24 VDC	1492-H5
28			
29	1	ALLEN-BRADLEY STRATIX 2000 UNMANAGED SWITCH, 5 ETHERNET COPPER PORTS	1783-US5TG
30			
31	16	ALLEN-BRADLEY, TERMINALS, BLUE	1492-J4B
32			
33	1	GRACE ENGINEERING PRODUCTS PANEL INTERFACE CONNECTOR W/CAT. 5e RJ45, PANEL MOUNT HOUSING, UL TYPE 4, GFCI DUPLEX INSIDE-OUTLET, 3 AMP CB	P-R2-K3RF3
34	1	KELE SPLIT CORE CURRENT TRANSDUCER, 2 WIRE LOOP POWERED, 4-20mA OUTPUT (SHIPPED LOOSE, FIELD INSTALLED)	SCX420200
35	1	DIGI CELLULAR ROUTER WITH POWER SUPPLY, AT&T SERVICE PROVIDER	IX10-00N4
36	1	DIGI AC POWER SUPPLY, EXTENDED TEMPERATURE	76002104
37	1	PANORAMA ANTENNAS PERMANENT MOUNT WIRELESS N - MIMO CELL & GPS BLACK	LP-IN1956-B
38	1	WPS ANTENNAS 5' EXTENSION CABLE RG58U LOW LOSS FOAM COAX, N-MALE TO SMA FEMALE OR EQUAL	RG58U-5-NMSM
39	1	DIGI DIN RAIL CLIP KIT	76002095

NOTES:
1. BILL OF MATERIALS QUANTITIES ARE TYPICAL FOR ONE RTU PANEL.

Smith Seckman Reid, Inc.
655 Primacy Parkway
Suite 401
Memphis, TN 38119
(901) 683-3900
FAX: (901) 683-3990
www.ssr-inc.com

SSR Project #:22640820

ROBERT S. GAINES
PROFESSIONAL ENGINEER
AGRICULTURE
COMMERCE
STATE OF TENNESSEE
04/11/25

REV	DATE	DESCRIPTION

REVISIONS

CITY OF DYERSBURG, TENNESSEE
DYERSBURG WATER SYSTEM
SCADA UPGRADES

DRAWN BY	RSG
DESIGNED BY	RSG
CHECKED BY	RSG

SHEET TITLE
WELL PUMP 8 RTU PANEL EXTERNAL & INTERNAL DETAILS

DATE
APRIL 11, 2025

PROJECT STATUS
BID SET

SHEET NUMBER
I1.12

Gaines, Williams & Associates, Inc.
Engineers
P.O. Box 38688
Germantown, Tennessee 38183-0688
PHONE: 901-756-9065
www.gaineswilliams.com

Copyright 2021 By Smith Seckman Reid Inc. All rights reserved. This document

4/9/2025 1:26:32 PM C:\Documents\PROJECTS\Dyersburg\SCADA Upgrade\DWGS\24104EI112.dwg

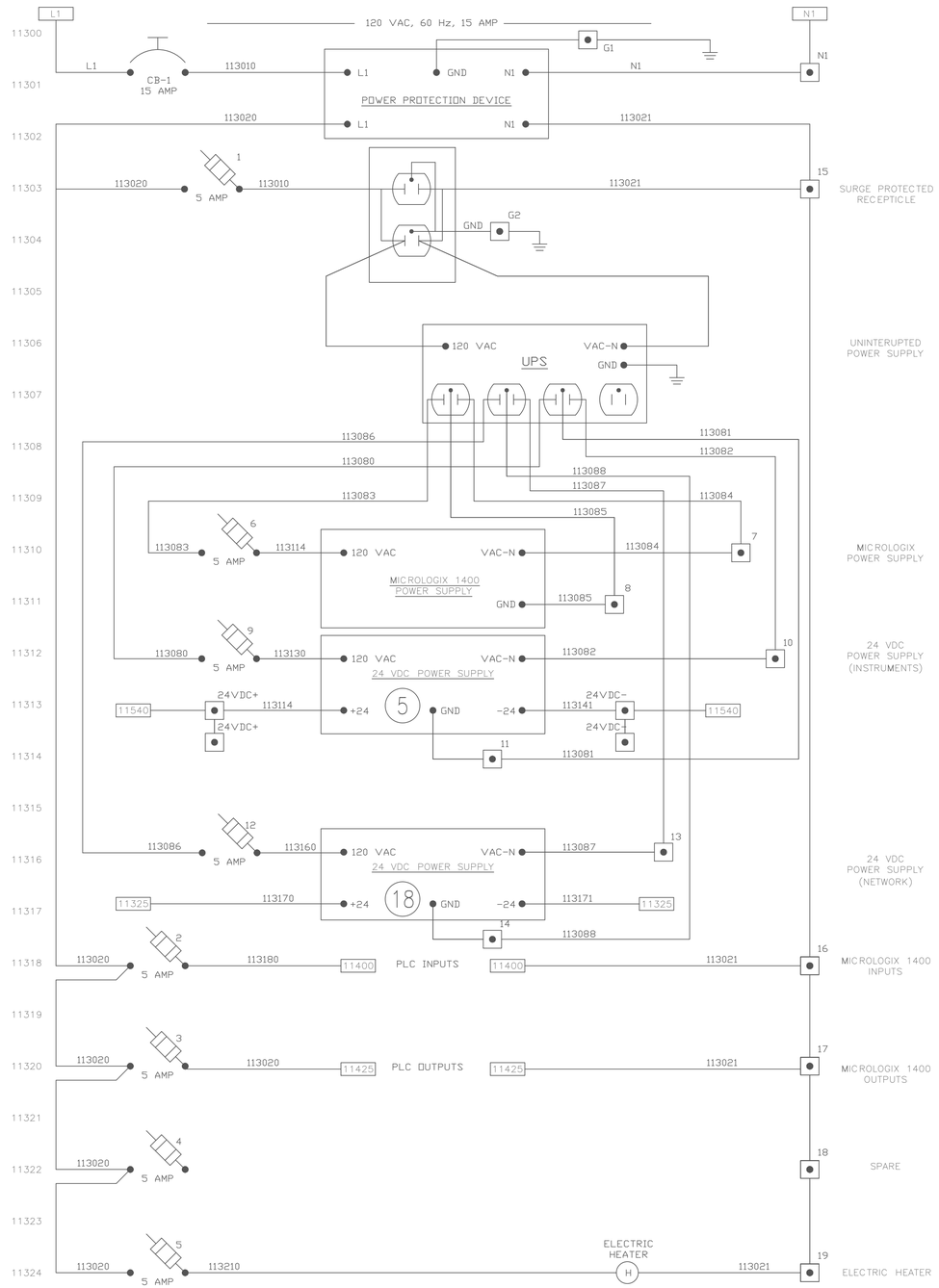

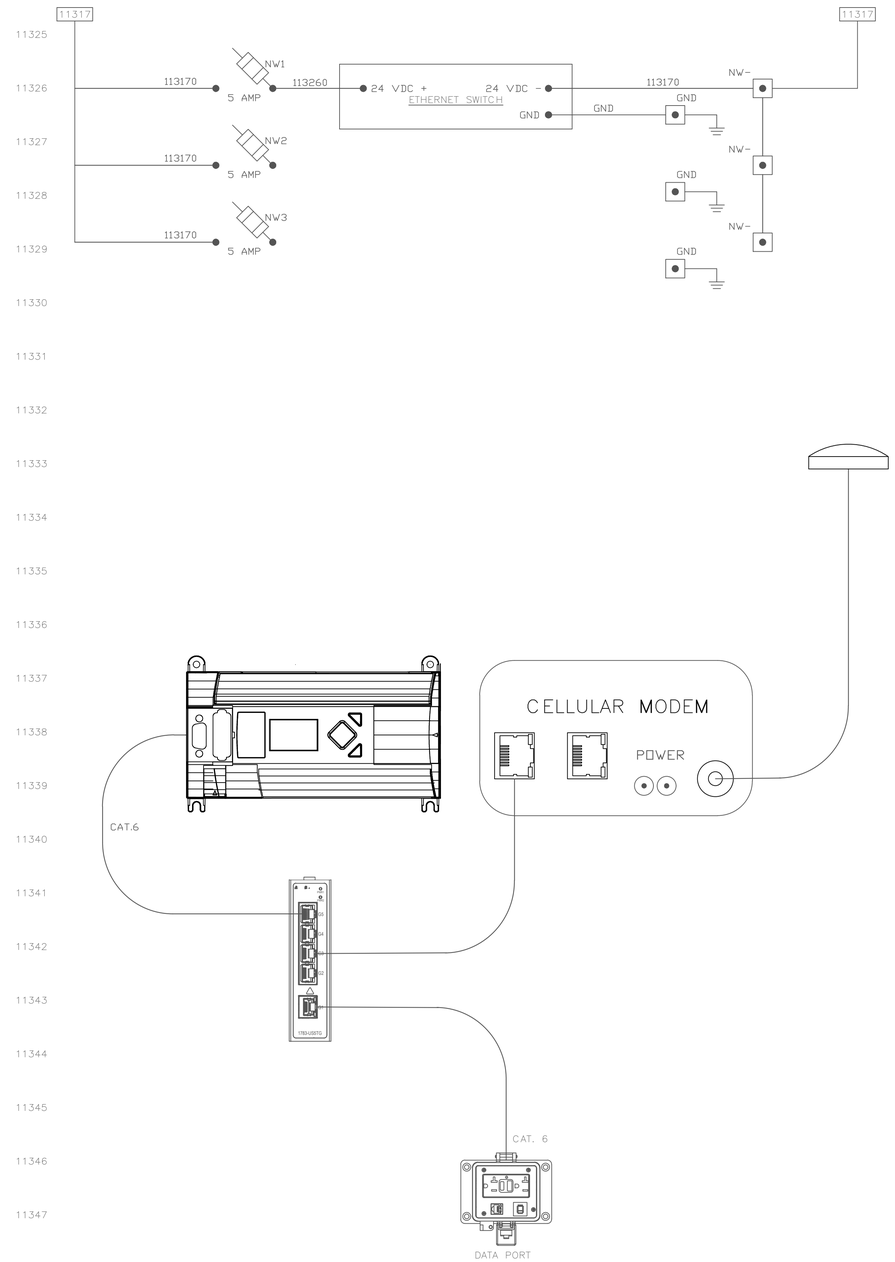

SSR Smith Seckman Reid, Inc.
655 Primacy Parkway
Suite 401
Memphis, TN 38119
(901) 683-3900
FAX: (901) 683-3990
www.ssr-inc.com

SSR Project #:22640820

04/11/25

REV	DATE	DESCRIPTION

REVISIONS

CITY OF DYERSBURG, TENNESSEE

DYERSBURG WATER SYSTEM SCADA UPGRADES

DRAWN BY	RSG
DESIGNED BY	RSG
CHECKED BY	RSG

SHEET TITLE

WELL PUMP 8 RTU PANEL POWER DISTRIBUTION

DATE

APRIL 11, 2025

PROJECT STATUS

BID SET

SHEET NUMBER

I1.13

Gaines, Williams & Associates, Inc.
Engineers
P.O. Box 38688
Germantown, Tennessee 38183-0688
PHONE: 901-756-9065
www.gaineswilliams.com

Copyright 2021 By Smith Seckman Reid Inc. All rights reserved. This document

4/9/2025 1:26:44 PM C:\Documents\PROJECTS\Dyersburg\SCADA Upgrade\DWGS\24104EI113.dwg

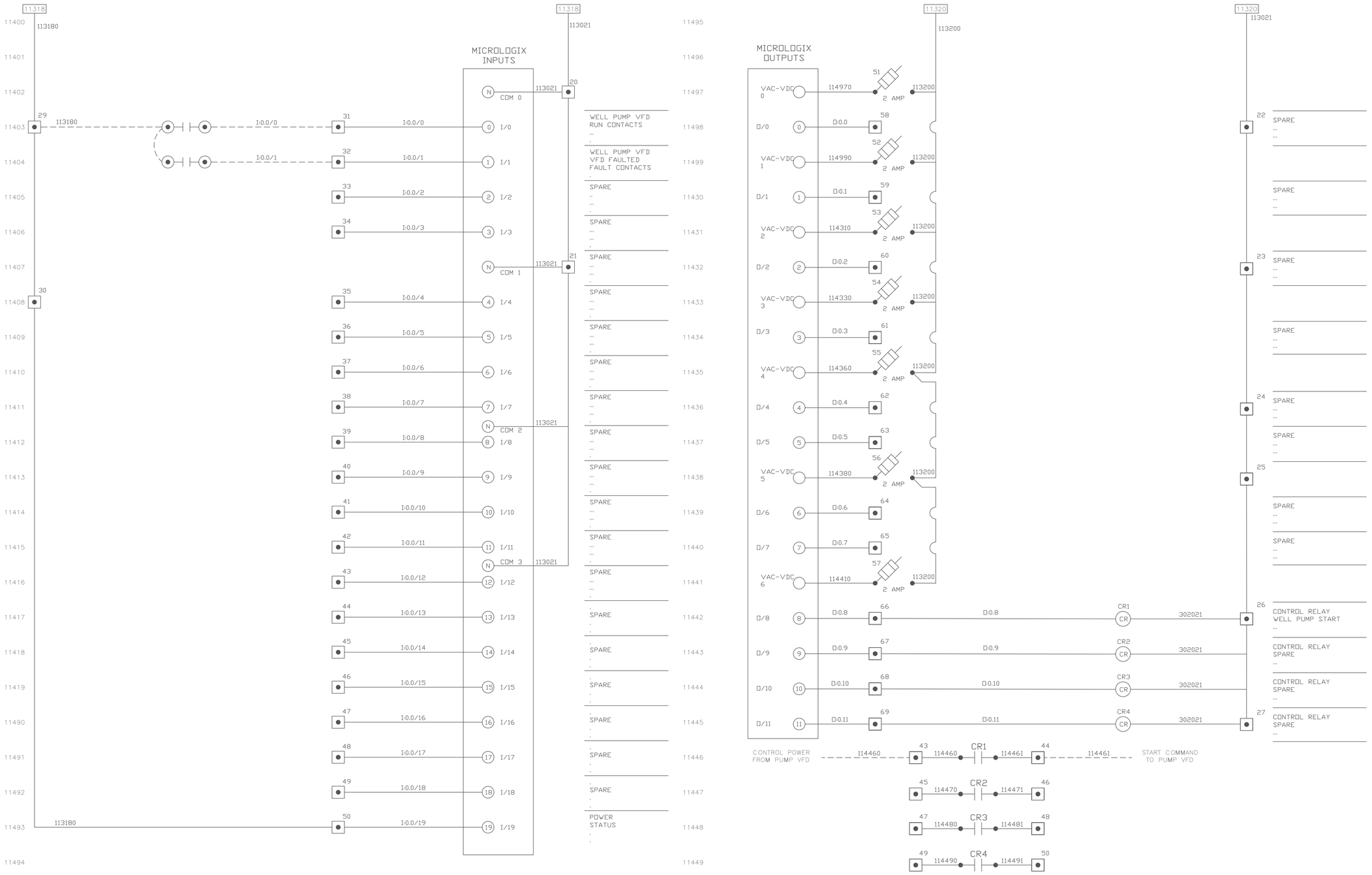

SSR Smith Seckman Reid, Inc.
655 Primacy Parkway
Suite 401
Memphis, TN 38119
(901) 683-3900
FAX: (901) 683-3990
www.ssr-inc.com

SSR Project #:22640820

ROBERT S. GAINES LICENSED PROFESSIONAL ENGINEER AGRICULTURE CIVIL CONVERSE INSTRUMENTATION STATE OF TENNESSEE
04/11/25

REV	DATE	DESCRIPTION
REVISIONS		

CITY OF DYERSBURG, TENNESSEE
DYERSBURG WATER SYSTEM
SCADA UPGRADES

DRAWN BY	RSG
DESIGNED BY	RSG
CHECKED BY	RSG

SHEET TITLE

WELL PUMP 8 RTU PANEL INPUT & OUTPUT WIRING

DATE
APRIL 11, 2025

PROJECT STATUS
BID SET

SHEET NUMBER
I1.14

Gaines, Williams & Associates, Inc.
Engineers
P.O. Box 38688
Germantown, Tennessee 38183-0688
PHONE: 901-756-9065
www.gainewilliams.com

Copyright 2021 By Smith Seckman Reid, Inc. All rights reserved. This document, or parts thereof, may not be reproduced in any form without written permission.

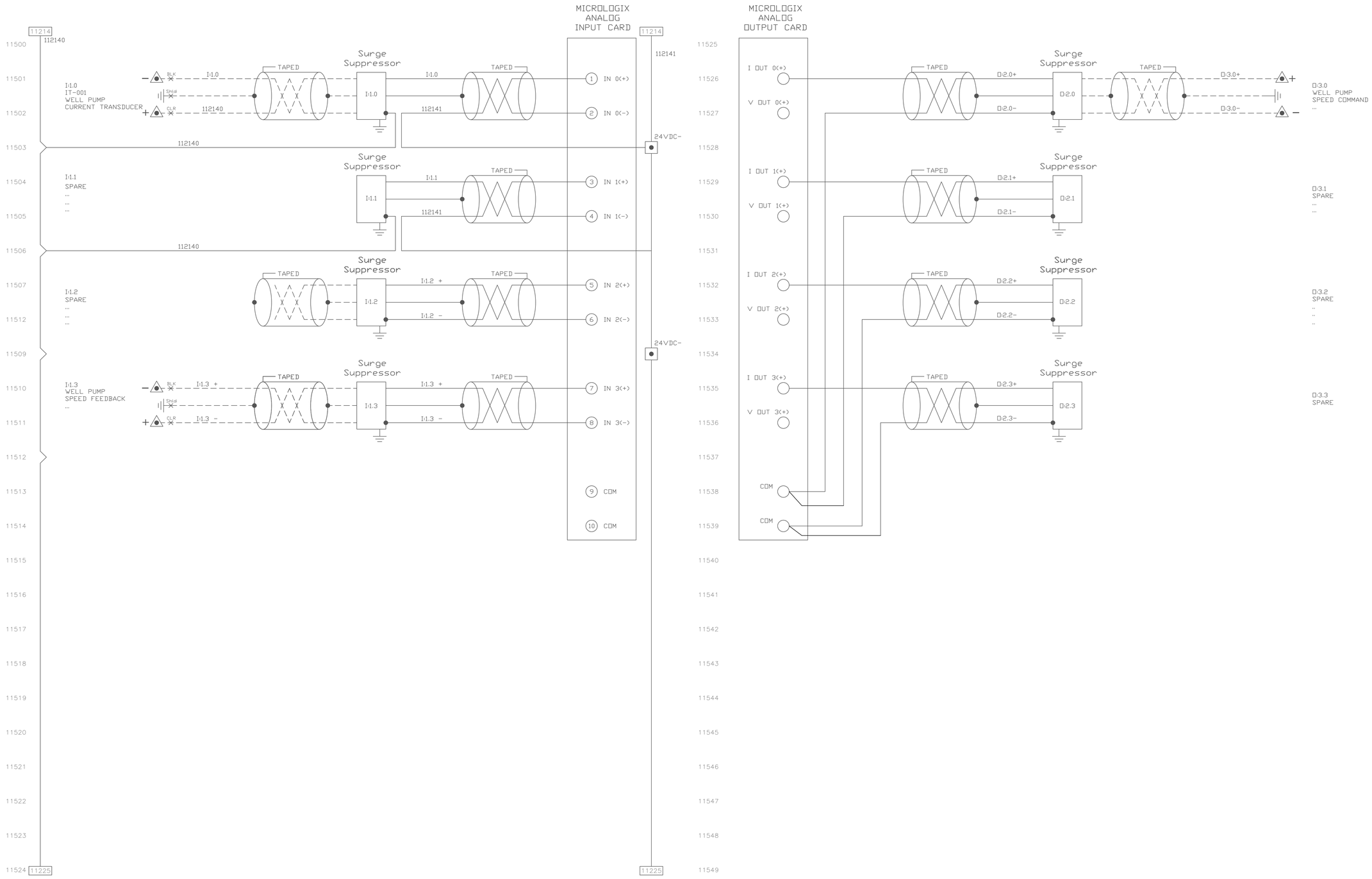

SSR Smith Seckman Reid, Inc.
655 Primacy Parkway
Suite 401
Memphis, TN 38119
(901) 683-3900
FAX: (901) 683-3990
www.ssr-inc.com

SSR Project #:22640820

ROBERT S. GAINES
PROFESSIONAL ENGINEER
AGRICULTURE
COMMERCE
STATE OF TENNESSEE
04/11/25

REV	DATE	DESCRIPTION

REVISIONS

CITY OF DYERSBURG, TENNESSEE

DYERSBURG WATER SYSTEM SCADA UPGRADES

DRAWN BY	RSG
DESIGNED BY	RSG
CHECKED BY	RSG

SHEET TITLE

WELL PUMP RTU PANEL ANALOG INPUT/OUTPUT WIRING

DATE
APRIL 11, 2025

PROJECT STATUS
BID SET

SHEET NUMBER
I1.15

Gaines, Williams & Associates, Inc.
Engineers
P.O. Box 38688
Germantown, Tennessee 38183-0688
PHONE: 901-756-9065
www.gaineswilliams.com

Copyright 2021 By Smith Seckman Reid, Inc. All rights reserved. This document

C:\Documents\PROJECTS\Dyersburg\SCADA Upgrade\DWGS\241104E1115.dwg

4/9/2025 1:28:29 PM